EN

Movement by Perfection

Drive Technology

for elevators
2020 Edition

The Royal League in ventilation, control and **drive technology**

ZIEHL-ABEGG

ZIEHL-ABEGG Brand Products for Elevator Technology

ZAtop - The Flexible One

Complete series for elevators up to 6,500 kg payload - everything from one single source! The gearless elevator machine of the ZAtop series, designed as an internal rotor is the BEST solution for elevators with and without machine room.

ZAsyn - The Slim One

Complete series for elevators up to 2,500 kg payload - everything from one single source! The gearless elevator machine of the ZAsyn series, designed as an external rotor, stands out as an extremely slim elevator machine for elevators with and without machine room.

ZAdisc - The Flat One

Complete series for elevators up to 1,125 kg payload - everything from one single source! The gearless elevator machine of the ZAdisc series, designed as a disc rotor, is the space-saving miracle par excellence for elevators without a machine room.

ZAlift - The Perfect Choice

With the ZAlift calculation software, you can accurately calculate the machine that fits to your elevator and get helpful information for the installation, operation and final inspection.

ZAdyn - For Proper Control

With the frequency inverter from the ZAdyn series, you comfortably and exactly control the speed of your elevator machines.

EVAC - The Bodyguard

The evacuation units from the EVAC series make laborious, delayed rescue of trapped people by external personnel superfluous.

ZApad - The Optimal Control

If you want external activation, the ZApad operating terminal is the perfect add-on for ZAdyn4C frequency inverter, ZArec4C recuperation units and EVAC 3C evacuation units.

ZAmon - The Optimiser

If transparency and intelligent control are required, ZAmon is the software at your side. ZAmon provides all options needed to selectively control the ZAdyn frequency inverters, to backup and manage the data and to diagnose weak points - the optimiser for your elevator system.

Contents

The ZIEHL-ABEGG Company Page 4 Information

Gearless elevator machines ZAtop Page 12 ZAtop

Gearless elevator machines ZAtopx Page 34 ZAtopx

Gearless elevator machines ZAsyn Page 40 ZAsyn

Gearless elevator machines ZAdisc 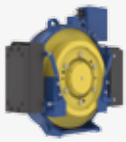 Page 48 ZAdisc

Motors VFD Page 54 VFD

System components Page 58 System components motors

Control technology Page 76 Control technology

System components control technology Page 94 System components control technology

General notes Page 125 Appendix

ZAvblue
ZIEHL-ABEG
Die Königsklass
der Lufttechnik,
Regeltechnik und Antriebstechnik
Mehr
Volumen
bei kleinerer
Baugröße

Welcome to the world of ZIEHL-ABEGG

Top technology “Made by ZIEHL-ABEGG”

A pioneering spirit and the courage of innovation were the driving forces behind Emil Ziehl’s development of his first external rotor motor over a hundred years ago. With this he laid the corner stone for the success story of ZIEHL-ABEGG in 1910. Today, the family company ZIEHL-ABEGG, with its headquarters in Künzelsau, develops, produces and sells high quality, high-tech components: Fans, special electric motors and their perfectly adapted, state-of-the-art control technology. Still today, Emil Ziehl’s pioneering spirit is the motivator for making good even better and finding new, revolutionary solutions. ZIEHL-ABEGG is based in Southern Germany but is at home all over the world. At the worldwide production and sales sites, thousands of employees develop, produce and sell technical, economical and ecological progress.

Welcome to the world of ventilation, control and drive technology.

Your contact into the world of ZIEHL-ABEGG

Would you like to learn more about the company ZIEHL-ABEGG, its products and applications? Your current direct contact partners can always be found at www.ziehl-abegg.com

Reliability
Output
Drive comfort

Elevator technology from ZIEHL-ABEGG

Millions of people ride elevators day for day all over the world. They ride quickly, safely and comfortably up to their offices, apartments or hotel rooms and back down again. They have good reason to trust this technology because many elevator manufacturers put their trust in the decisive contribution that ZIEHL-ABEGG makes to reliability and drive comfort. It is the drive and control engineering, the “heart” and “soul” of the elevator. One of the reasons for this trust is ZIEHL-ABEGG’s ability to adapt the motor and control engineering to the manufacturer’s specific requirements regardless of how far up or down the elevator is to travel and how much space is available. Another good reason is the ZIEHL-ABEGG know-how based on their 100 years of experience. It is the visions of the elevator manufacturers that become reality in the drive and control systems made by ZIEHL-ABEGG.

The Royal League of elevator machines

Maximum benefit for manufacturers and user

Meeting the requirements of elevator builders, owners and passengers is the decisive success factor for elevator manufacturers. As a partner to leading manufacturers, ZIEHL-ABEGG constantly strives to make the maximum contribution to satisfying these needs. This goal is reflected in many ways. For example in the cost saving and environmentally friendliness of the elevators thanks to the high efficiency of the ZIEHL-ABEGG motor technology with the precisely adapted control technology. Or in the certainty of getting the ideal drive for every architectural and constructional requirement: Low-noise, with and without gear, as a synchronous or asynchronous motor, with powerful, compact drives right down to small motors for minimal shaft volumes. ZIEHL-ABEGG also demonstrates their solution competence in highly intelligent frequency inverters and evacuation units and in user-friendly diagnostic software. But the root of all considerations is still the passenger and the fulfilment of his needs: Maximum reliability and greatest drive comfort. ZIEHL-ABEGG makes the best possible contribution to this.

The Royal League of modernisation

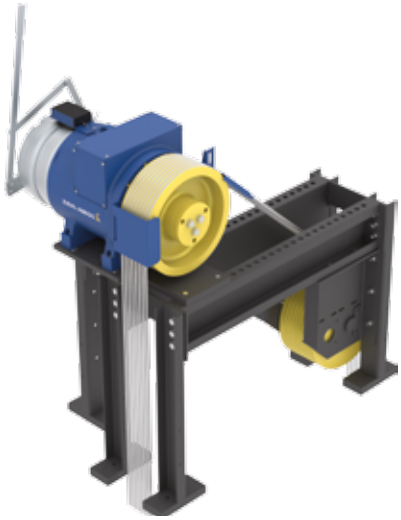

Obtained values - securing the future

ZIEHL-ABEGG offers maximum customer benefits quickly and simply: They turn old elevators into efficient, energy saving, comfortable and low-noise systems. Often just a few but all the more intelligent retrofits suffice. ZIEHL-ABEGG has a wide range of high-tech components ready for this. The customer gets innovating solution suggestions. The competence of ZIEHL-ABEGG and the use of the high quality and high efficiency products result in a reasonable and profitable investment. Drives with the highest standards and in different sizes as well as precisely adapted control engineering and suitable machine frames are a central part of the product portfolio.

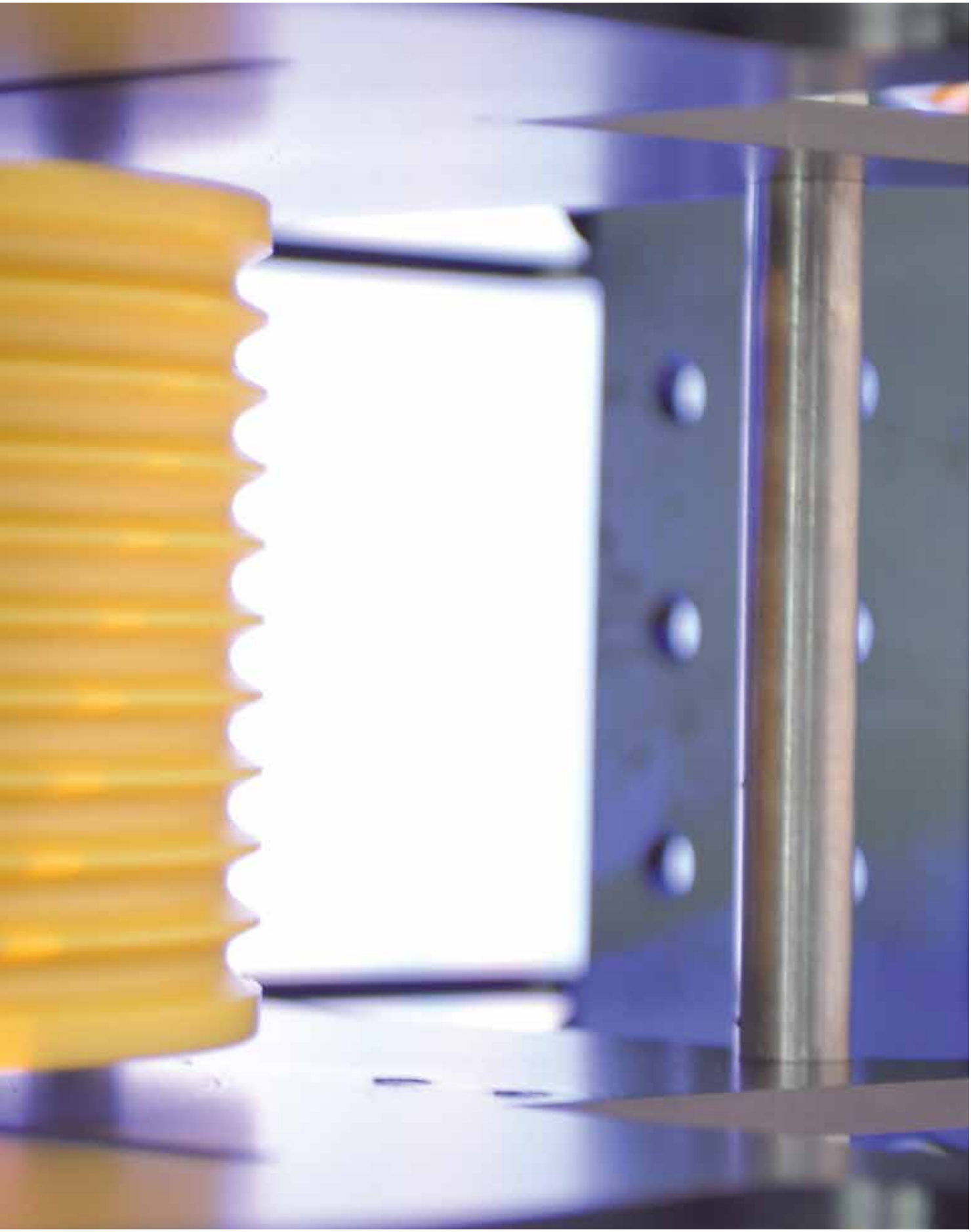

BEGG

Gearless elevator machine ZAtop

Product overview

Information	Page 14
ZAtop SM132/A	Page 16
ZAtop SM132/B	Page 18
ZAtop SM160	Page 20
ZAtop SM180	Page 22
ZAtop SM190	Page 24
ZAtop SM200	Page 26
ZAtop SM210	Page 28
ZAtop SM250B / SM250D	Page 30
ZAtop SM250C	Page 32

ZAtop Gearless elevator machine

General information

The top solution for elevators with and without a machine room

Properties

- Gearless synchronous motor actuated by NdFeB permanent magnets
- Internal rotor motor
- According to the provisions of the Lift Directive 2014/33/EU
- Various frame sizes for optimum shaft and shaft head dimensions
- High efficiency
- Noise emissions < 50 dB(A)
- Insulation class F (155°C) with temperature monitoring via PTC thermistor
- Travel speeds of up to 4.0 m/s
- Rope diameter of 4.0 to 16.0 mm
- Traction sheaves:
  - Diameter of 120 mm to 640 mm
  - Various groove geometries
- Motor brake:
  - Safety component according to the Lift Directive 2014/33/EU
  - Separately actuated brake circuits
  - Deployable as an element of the ascending car overspeed protection means
  - Deployable as part of the protection against unintended car movement
  - Mechanical hand release (optional)
- Can be equipped with conventional encoder systems (e.g. EnDat, SSI, SinCos)
- Optimum package solution with ZAdyn frequency inverter from ZIEHL-ABEGG

A glimpse inside

① Absolute encoder
② Brake
③ Electrical junction box from brake
④ Housing with electric terminal box
⑤ Stator lamination
⑥ Rotor with magnets
⑦ Motor shaft
⑧ Shaft seal ring
⑨ Shaft bearing
⑩ Flange A-side
⑪ Traction sheave

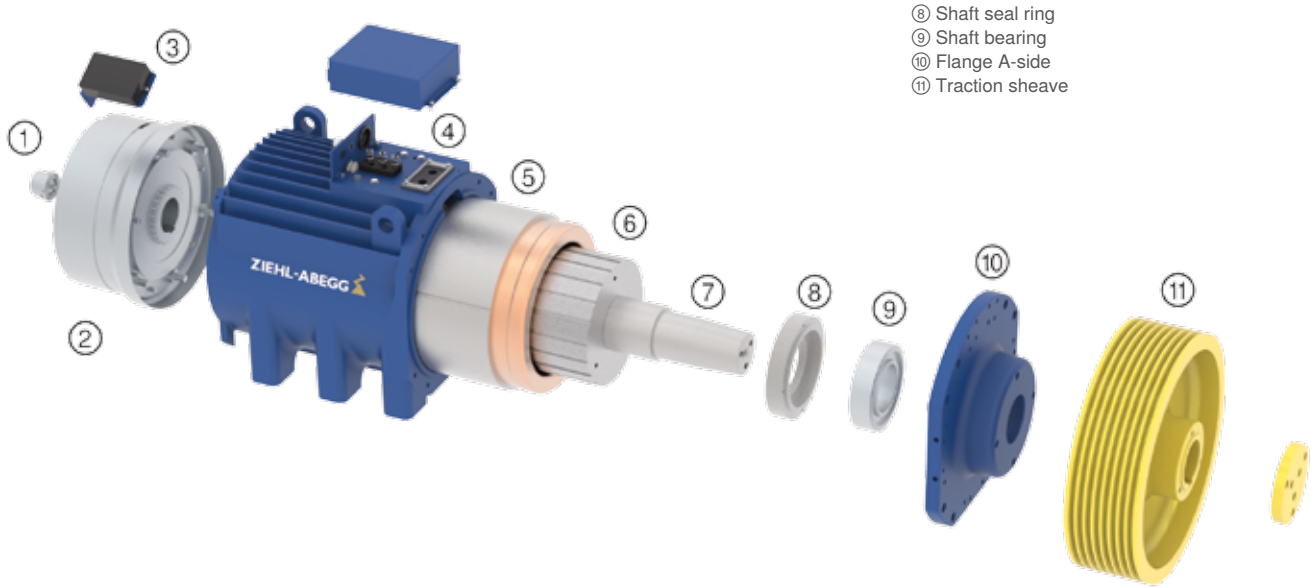

Product portfolio ZAtop

ZIEHL-ABEGG offers you the most comprehensive range of gearless elevator machines with the greatest flexibility and variability.

Suspension	Rated load max. kg	Traction sheave diameter mm	Axle load kg	Torque Nm	ZAtop		
2:1	1050	120...160	2400	120...200	SM132/A	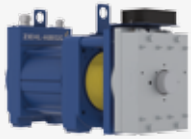	Page 16
	1050	120...200	2400	120...200	SM132/B		Page 18
	1125	160...240	1900...2500	195...260	SM160		Page 20
	1050	200...240	1500...2500	215...445	SM180		Page 22
	1200	200...240	1850...2400	250...380	SM190		Page 24
	1600	160...500	1850...3600	250...710	SM200		Page 26
	2500	240...520	4500	850...1000	SM210	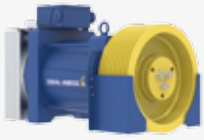	Page 28
	3000	320...640	6000...8000	1120...2500	SM250.45 SM250.60 SM250.80		Page 30
	3500	450...520	13000	2100...2650	SM250.100		Page 32

ZAtop Gearless elevator machine

SM132/A/AS

Synchronous motor actuated by permanent magnets and according to the provisions of the Lift Directive 2014/33/EU

Drive
- NdFeB magnets
- Structural width ≤ 205 mm for the narrowest shaft dimensions
- Noise emissions: < 50 dB(A)
- Insulation class F with temperature monitoring

Brake system
- Safety component according to the Lift Directive 2014/33/EU
- Separately activated brake circuits
- Deployable as an element of the ascending car overspeed protection means
- Deployable as part of the protection against unintended car movement

Deflection pulleys	Page 70
ZAlift	Page 74

Technical data

SM132/A/AS

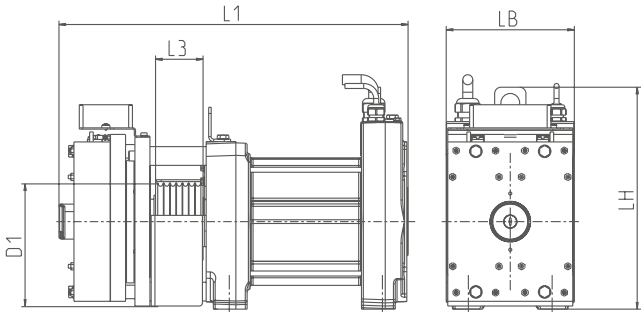

Motor type	Nominal torque Nm	Max. axle load kg	Nominal speed min⁻¹	Rated output power kW	L1 mm	LH mm	LB mm	D1 mm	L3 mm	Weight kg
SM132.21/A	120	2400	162...510	2.0...6.4	468	355	205	120	56	115
								160		120
SM132.35/A	200	2400	162...510	3.4...10.7	559	355	205	120	76	140
								160		145
SM132.21/AS	120	2400	162...510	2.0...6.4	468	355	210	120	56	115
								160		120
SM132.35/AS	200	2400	162...510	3.4...10.7	559	355	210	120	76	140
								160		145

Scope of delivery and options

SM132/A	Standard	Options
Motor	Gearless elevator machine	-
Traction sheave	See D1	-
Brake	Certified brake system	Mechanical hand release
Brake monitoring	Microswitch	Inductive proximity switches
Motor cable	5 m	10 m, 15 m, 20 m, 25 m halogen free
Absolute encoder type Heidenhain	ECN 1313 EnDat	ECN 1313 SSI, ERN 1387, ERN 1326
Rope guard	2 pieces	3. Rope guard
Temperature monitoring	PTC thermistor	PT100-thermistor
Cooling	Surface cooling	-

Resulting rope force

ZAtop SM132/A

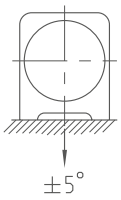

ZAtop SM132/AS

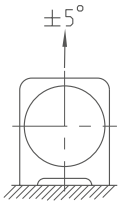

Example configurations

Other configurations, also outside of the examples listed below, are possible.
Our calculation software ZAlift is available to you for fast and convenient calculation of your elevator machine.

Suspension	Max. payload kg	Speed m/s	Motor type	Traction sheave mm	Rope Number x Ø mm	Motor power kW	Rated current A
1:1	300	1.0	SM132.21	120	5 x 6.5	2.0	6.5
	450	1.0	SM132.35	160	6 x 6.5	2.8	11.8
	480	1.0	SM132.35	120	6 x 6.5	3.0	9.4
	550	1.0	SM132.35	120	7 x 6.5	3.4	10.8
	550	1.6	SM132.35	120	7 x 6.5	5.5	19.0
2:1	300	1.0	SM132.21	160	4 x 6.5	2.1	6.2
	450	1.0	SM132.21	160	4 x 6.5	3.0	8.9
	630	1.0	SM132.21	120	5 x 6.5	4.4	12.5
	630	1.6	SM132.21	120	4 x 6.5	6.5	17.1
	800	1.0	SM132.35	160	6 x 6.5	6.5	19.2
	1050	1.0	SM132.35	120	7 x 6.5	6.7	18.7

ZAtop Gearless elevator machine

SM132/B/BS

Synchronous motor actuated by permanent magnets and according to the provisions of the Lift Directive 2014/33/EU

Drive
- NdFeB magnets
- Structural width ≤ 205 mm for the narrowest shaft dimensions
- Noise emissions: < 50 dB(A)
- Insulation class F with temperature monitoring

Brake system
- Safety component according to the Lift Directive 2014/33/EU
- Separately activated brake circuits
- Deployable as an element of the ascending car overspeed protection means
- Deployable as part of the protection against unintended car movement

Deflection pulleys	Page 70
ZAlift	Page 74
Machine frames	Page 60

Technical data

SM132/B/BS

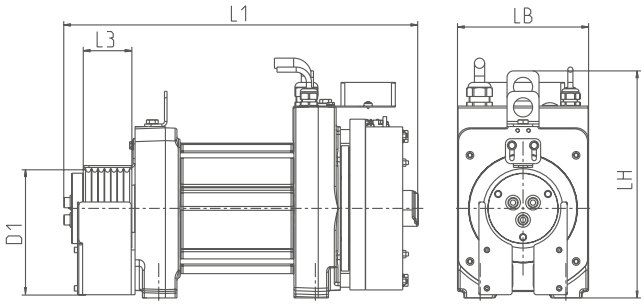

Motor type	Nominal torque	Max. axle load	Nominal speed	Rated output power	L1	LH	LB	D1	L3	Weight
	Nm	kg	min^{-1}	kW	mm	mm	mm	mm	mm	kg
SM132.21/B	120	2400	162...510	2.0...6.4	465	355	205	120	56	105
							205	160		110
							220	200		110
SM132.35/B	200	2400	162...510	3.4...10.7	555	355	205	120	76	130
							205	160		135
							220	200		135
SM132.21/BS	120	2400	162...510	2.0...6.4	465	355	210	120	56	105
								160		110
SM132.35/BS	200	2400	162...510	3.4...10.7	555	355	210	120	76	135
								160		140

Scope of delivery and options

SM132/B	Standard	Options
Motor	Gearless elevator machine	-
Traction sheave	See D1	-
Brake	Certified brake system	Mechanical hand release
Brake monitoring	Microswitch	Inductive proximity switches
Motor cable	5 m	10 m, 15 m, 20 m, 25 m halogen free
Absolute encoder type Heidenhain	ECN 1313 EnDat	ECN 1313 SSI, ERN 1387, ERN 1326
Rope guard	2 pieces	3. Rope guard
Temperature monitoring	PTC thermistor	PT100-thermistor
Cooling	Surface cooling	-

Resulting rope force

ZAtop SM132/B

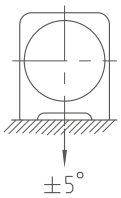

ZAtop SM132/BS

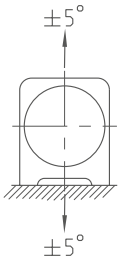

ZAtop SM132/BS

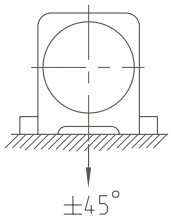

with lateral form lock support

Example configurations

Other configurations. also outside of the examples listed below. are possible.
Our calculation software ZAlift is available to you for fast and convenient calculation of your elevator machine.

Suspension	Max. payload kg	Speed m/s	Motor type	Traction sheave mm	Rope Number x Ø mm	Motor power kW	Rated current A
1:1	300	1.0	SM132.21	120	5 x 6.5	2.0	6.5
	300	1.0	SM132.35	200	6 x 6.5	2.2	12.3
	450	1.0	SM132.35	160	6 x 6.5	2.8	11.8
	480	1.0	SM132.35	120	6 x 6.5	3.0	9.4
	550	1.0	SM132.35	120	7 x 6.5	3.4	10.8
	550	1.6	SM132.35	120	7 x 6.5	5.5	19.0
2:1	300	1.0	SM132.21	160	4 x 6.5	2.1	6.2
	450	1.0	SM132.21	160	4 x 6.5	3.0	8.9
	525	1.0	SM132.35	200	5 x 6.5	3.8	14.3
	525	2.0	SM132.35	200	6 x 6.5	7.8	20.6
	630	1.0	SM132.21	120	5 x 6.5	4.4	12.5
	630	1.6	SM132.21	120	4 x 6.5	6.5	17.1
	800	1.0	SM132.35	160	6 x 6.5	6.5	19.2
	1050	1.0	SM132.35	120	7 x 6.5	6.7	18.7

ZAtop Gearless elevator machine

SM160

Synchronous motor actuated by permanent magnets and according to the provisions of the Lift Directive 2014/33/EU

Drive
- NdFeB magnets
- Structural width ≤ 250 mm for the narrowest shaft dimensions
- Noise emissions: < 50 dB(A)
- Insulation class F with temperature monitoring

Brake system
- Safety component according to the Lift Directive 2014/33/EU
- Separately activated brake circuits
- Deployable as an element of the ascending car overspeed protection means
- Deployable as part of the protection against unintended car movement

Machine frames	Page 60
Deflection pulleys	Page 70
Adapter plates	Page 69
ZAlift	Page 74

Technical data

SM160

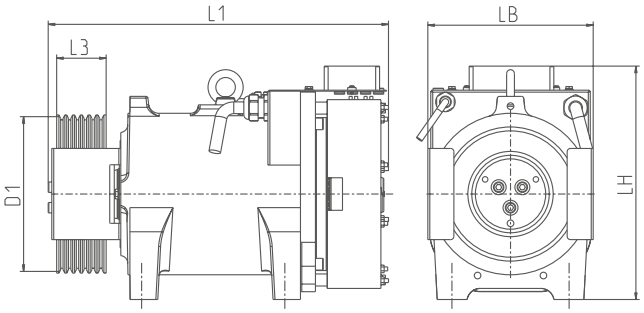

Motor type	Nominal torque Nm	Max. axle load kg	Nominal speed min^{-1}	Rated output power kW	L1 mm	LH mm	LB mm	D1 mm	L3 mm	Weight kg
SM160.30B/S	195	1900	192...384	3.9...7.8	532	359	248	120	101	140
					531		248	160	101	146
					523		248	200	76	149
					523		248	210	76	150
					523		254	240	76	155
SM160.40B/S	260	2500	192...384	5.2...10.5	617	359	248	120	140	165
					615		248	160	140	172
					596		248	210	106	178
					596		254	240	88	181

Scope of delivery and options

SM160	Standard	Options
Motor	Gearless elevator machine	-
Traction sheave	See D1	-
Brake	Certified brake system	Mechanical hand release
Brake monitoring	Microswitch	Inductive proximity switches
Motor cable	5 m	10 m, 15 m, 20 m, 25 m halogen free
Absolute encoder type Heidenhain	ECN 1313 EnDat	ECN 1313 SSI, ERN 1387, ERN 1326
Rope guard	2 pieces	-
Temperature monitoring	PTC thermistor	PT100-thermistor
Cooling	Surface cooling	Forced ventilation

Resulting rope force

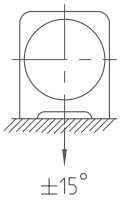

Example configurations

Other configurations, also outside of the examples listed below, are possible.
Our calculation software ZAlift is available to you for fast and convenient calculation of your elevator machine.

Suspension	Max. payload kg	Speed m/s	Motor type	Traction sheave mm	Rope Number x Ø mm	Motor power kW	Rated current A
1:1	300	1.0	SM160.30B/S	200	7 x 6.5	3.3	11.3
	450	1.0	SM160.40B/S	160	5 x 6.5	3.5	11.5
	480	1.0	SM160.40B/S	160	5 x 6.5	3.7	12.2
	550	1.6	SM160.40B/S	160	6 x 6.5	5.4	14.0
2:1	300	1.0	SM160.30B/S	200	4 x 6.5	4.4	10.5
	450	1.0	SM160.30B/S	200	5 x 6.5	5.1	12.3
	630	1.0	SM160.40B/S	210	7 x 6.5	7.2	18.1
	675	1.0	SM160.40B/S	240	7 x 6.5	5.9	14.8
	800	1.0	SM160.30B/S	160	6 x 6.5	6.5	16.0
	1125	1.0	SM160.40B/S	160	7 x 6.5	7.1	18.0

ZAtop Gearless elevator machine

SM180

Synchronous motor actuated by permanent magnets and according to the provisions of the Lift Directive 2014/33/EU

Drive
- NdFeB magnets
- Structural width ≤ 256 mm for the narrowest shaft dimensions
- Noise emissions: < 50 dB(A)
- Insulation class F with temperature monitoring

Brake system
- Safety component according to the Lift Directive 2014/33/EU
- Separately activated brake circuits
- Deployable as an element of the ascending car overspeed protection means
- Deployable as part of the protection against unintended car movement

Deflection pulleys	Page 70
Forced ventilation	Page 71
ZAlift	Page 74
Motor cables	Page 112

Technical data

SM180

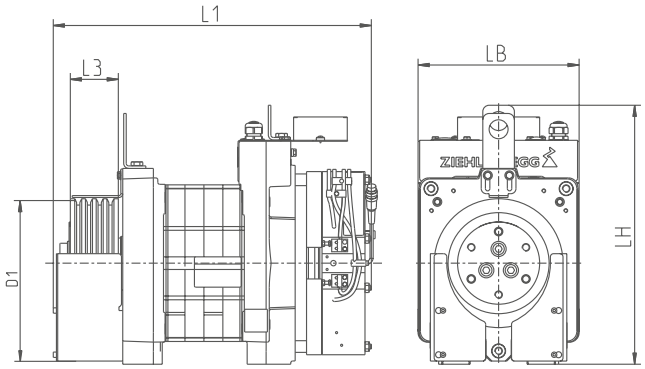

Motor type	Nominal torque Nm	Max. axle load kg	Nominal speed min^{-1}	Rated output power kW	L1 mm	LH mm	LB mm	D1 mm	L3 mm	Weight kg
SM180.24/B	215	1500	162...192	3.6...4.3	504	412	255	200	76	160
							256	240		165
SM180.35/B	295	1850	162...306	5.0...9.5	563	412	255	200	88	180
							256	240		185
SM180.45/B	385	2500	162...306	7.5...12.3	643	412	255	200	124	215
							256	240		220
SM180.46/B	445	2500	162...258	7.5...12.0	643	412	255	200	124	225
							256	240		230

Scope of delivery and options

SM180	Standard	Options
Motor	Gearless elevator machine	-
Traction sheave	See D1	-
Brake	Certified brake system	Mechanical hand release system with or without bowden cables
Brake monitoring	Microswitch	Inductive proximity switches
Motor cable	-	5 m. 10 m. 15 m. 20 m. 25 m halogen free
Absolute encoder type Heidenhain	BiSS-C	ECN 1313 EnDat. ECN 1313 SSI. ERN 1387. ERN 1326
Rope guard	2 pieces	3. Rope guard
Temperature monitoring	PTC thermistor	PT100-thermistor
Cooling	Surface cooling	Forced ventilation

Resulting rope force

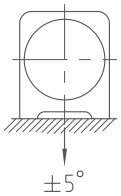

Example configurations

Other configurations. also outside of the examples listed below. are possible.
Our calculation software ZAlift is available to you for fast and convenient calculation of your elevator machine.

Suspension	Max. payload kg	Speed m/s	Motor type	Traction sheave mm	Rope Number x Ø mm	Motor power kW	Rated current A
2:1	480	1.0	SM180.24/B	200	5 x 6.5	4.3	11.0
	480	1.0	SM180.24/B	240	6 x 6.5	3.6	11.0
	675	1.0	SM180.35/B	200	7 x 6.5	5.9	16.0
	675	1.0	SM180.35/B	240	6 x 6.5	5.0	14.0
	675	1.6	SM180.35/B	200	7 x 6.5	9.5	22.0
	675	1.6	SM180.35/B	240	6 x 6.5	8.0	19.5
	1050	1.0	SM180.45/B	200	10 x 6.5	7.7	20.0
	1050	1.0	SM180.45/B	240	8 x 6.5	7.5	21.0
	1050	1.0	SM180.46/B	200	11 x 6.5	8.9	23.0
	1050	1.0	SM180.46/B	240	10 x 6.5	7.5	20.0
	1050	1.6	SM180.45/B	200	10 x 6.5	12.3	31.0
	1050	1.6	SM180.46/B	200	11 x 6.5	13.8	34.5
	1050	1.6	SM180.45/B	240	8 x 6.5	12.0	31.0
	1050	1.6	SM180.46/B	240	10 x 6.5	12.0	31.0

ZAtop Gearless elevator machine

SM190

Synchronous motor actuated by permanent magnets and according to the provisions of the Lift Directive 2014/33/EU

Drive
- NdFeB magnets
- Structural width ≤ 320 mm for the narrowest shaft dimensions
- Noise emissions: < 50 dB(A)
- Insulation class F with temperature monitoring

Brake system
- Safety component according to the Lift Directive 2014/33/EU
- Separately activated brake circuits
- Deployable as an element of the ascending car overspeed protection means
- Deployable as part of the protection against unintended car movement

Machine frames	Page 60
Deflection pulleys	Page 70
Adapter plates	Page 69
ZAlift	Page 74

Technical data

SM190

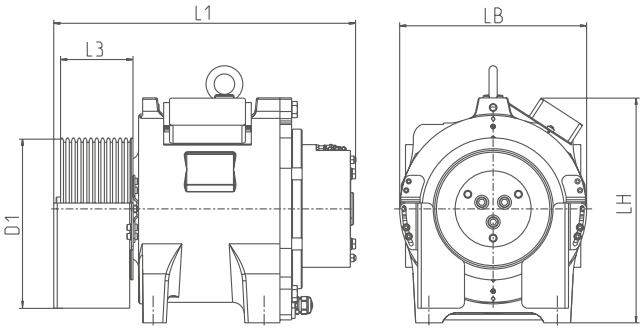

Motor type	Nominal torque	Max. axle load	Nominal speed	Rated output power	L1	LH	LB	D1	L3	Weight
	Nm	kg	min^{-1}	kW	mm	mm	mm	mm	mm	kg
SM190.15	250	1850	168...192	4.4...5.0	483	385	320	200	76	160
								240	88	166
SM190.23	380	2400	168...192	6.7...7.6	514	385	320	200	106	195
								240	124	204

Scope of delivery and options

SM190	Standard	Options
Motor	Gearless elevator machine	-
Traction sheave	See D1	-
Brake	Certified brake system	-
Brake monitoring	Microswitch	-
Motor cable	10 m	-
Absolute encoder type Heidenhain	ECN 1313 EnDat	-
Rope guard	2 pieces	3. Rope guard
Temperature monitoring	PTC thermistor	PT100-thermistor
Cooling	Surface cooling	Forced ventilation

Resulting rope force

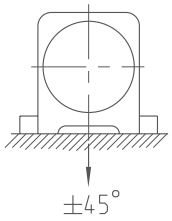

with lateral form lock support

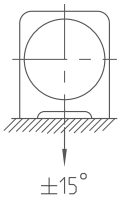

Example configurations

Other configurations, also outside of the examples listed below, are possible.
Our calculation software ZAlift is available to you for fast and convenient calculation of your elevator machine.

Suspension	Max. payload kg	Speed m/s	Motor type	Traction sheave mm	Rope Number x Ø mm	Motor power kW	Rated current A
1:1	300	1.6	SM190.15	200	6 x 6.5	3.3	10.6
	450	1.6	SM190.23	240	7 x 6.5	4.8	17.5
2:1	300	1.0	SM190.15	200	4 x 6.5	2.2	6.3
	450	1.0	SM190.15	200	5 x 6.5	3.2	9.2
	630	1.0	SM190.15	240	6 x 6.5	4.4	13.5
	675	1.0	SM190.15	200	7 x 6.5	4.8	13.6
	1050	1.0	SM190.23	200	9 x 6.5	7.2	19.9
	1200	1.0	SM190.23	200	7 x 6.5	7.6	21.1

ZAtop gearless elevator machine

SM200

SM200.15C/20C/30C

SM200.40D/45D

Synchronous motor actuated by permanent magnets and according to the provisions of the Lift Directive 2014/33/EU

Drive
- NdFeB magnets
- Structural width ≤ 320 mm for the narrowest shaft dimensions
- Noise emissions: < 50 dB(A)
- Insulation class F with temperature monitoring

Brake system
- Safety component according to the Lift Directive 2014/33/EU
- Separately activated brake circuits
- Deployable as an element of the ascending car overspeed protection means
- Deployable as part of the protection against unintended car movement

Technical data

SM200

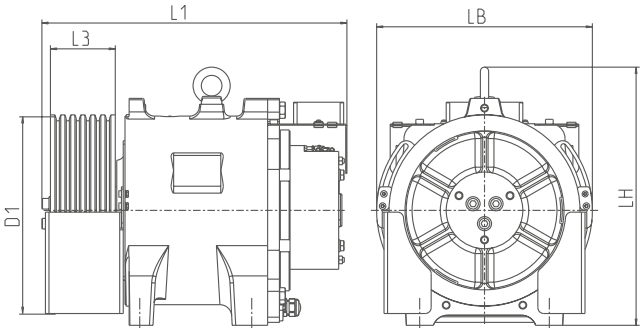

Motor cables	Page 112
Machine frames	Page 60
Deflection pulleys	Page 70
Adapter plates	Page 69
Forced ventilation	Page 71
ZAlift	Page 74

Motor type	Nominal torque Nm	Max. axle load kg	Nominal speed min^{-1}	Rated output power kW	L1 mm	LH mm	LB mm	D1 mm	L3 mm	Weight kg
SM200.15C	250	1850	96...300	2.5...7.9	487	438	320	160	76	167
							320	200	76	173
							320	210	76	175
							320	240	88	180
							366	320	74	185
SM200.20C	330	2800	96...300	3.3...10.4	518	438	320	160	106	187
					518		320	200	106	193
					518		320	210	106	195
					522		320	240	124	205
					518		366	320	110	210
					518		422	400	92	230
					518		474	450	92	235
SM200.30C	475	2800	96...300	4.8...14.1	564	438	320	200	106	223
							320	210	106	225
							320	240	124	235
							360	320	110	240
							422	400	92	260
							474	450	92	265
SM200.40D	600	3300	96...300	6.0...18.8	668	451	322	160	143	280
					637		322	200	106	282
					637		322	240	124	295
					685		322	240	173	303
					640		360	320	122	307
					637		422	400	95	310
					637		520	500	90	329
SM200.45D	710	3600	60...300	4.5...20.4	668	451	322	160	143	280
					637		322	200	106	282
					637		322	240	124	295
					685		322	240	173	303
					640		360	320	122	307
					637		422	400	95	310
					637		520	500	90	329

Scope of delivery and options

SM200	Standard	Options
Motor	Gearless elevator machine	-
Traction sheave	See D1	-
Brake	Certified brake system	Mechanical hand release
Brake monitoring	Microswitch	Inductive proximity switches (SM200.15C to SM200.30C)
Motor cable	5 m (SM200.15C to SM200.30C)	5 m, 10 m, 15 m, 20 m, 25 m halogen free
Absolute encoder type Heidenhain	ECN 1313 EnDat	ECN 1313 SSI, ERN 1387, ERN 1326
Rope guard	2 pieces	3. Rope guard
Temperature monitoring	PTC thermistor	PT100-thermistor
Cooling	Surface cooling	Forced ventilation

Resulting rope force

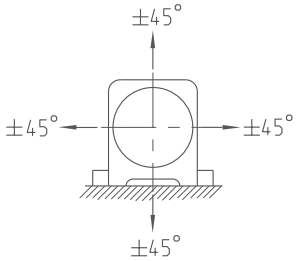

with lateral form lock support

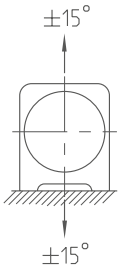

without lateral form lock support

Example configurations

Other configurations, also outside of the examples listed below, are possible.
Our calculation software ZAlift is available to you for fast and convenient calculation of your elevator machine.

Suspension	Max. payload kg	Speed m/s	Motor type	Traction sheave mm	Rope Number x Ø mm	Motor power kW	Rated current A
1:1	300	1,0	SM200.15C	240	6 x 6,5	2,0	8,8
	300	1,0	SM200.30C	400	3 x 10	3,4	12,8
	450	1,0	SM200.30C	240	8 x 6,5	3,1	11,3
	630	1,0	SM200.40D	320	5 x 8	4,0	18,8
	675	1,6	SM200.20C	160	8 x 6,5	6,7	19,2
	675	1,6	SM200.45D	320	5 x 8	6,9	20,3
	800	1,6	SM200.40D	160	9 x 6,5	7,9	21,0
2:1	450	1,25	SM200.15C	320	4 x 8	4,2	14,3
	630	1,6	SM200.20C	320	4 x 8	7,2	20,8
	675	1,6	SM200.15C	200 / 210	7 x 6,5	7,8	22,1
	800	1,0	SM200.20C	200	7 x 6,5	5,7	16,3
	800	1,6	SM200.30C	320	4 x 8	8,9	22,8
	1000	1,0	SM200.40D	320	6 x 8	7,1	19,9
	1000	2,5	SM200.40D	320	6 x 8	17,8	41,7
	1050	1,6	SM200.45D	400	6 x 8	11,5	31,9
	1200	1,0	SM200.20C	160	6 x 6,5	7,7	23,2
	1200	1,6	SM200.30C	200	6 x 6,5	12,2	29,7
	1350	1,6	SM200.45D	320	6 x 8	14,7	39,9
	1600	1,6	SM200.45D	240	12 x 6,5	18,1	45,8

ZAtop Gearless elevator machine

SM210

Synchronous motor actuated by permanent magnets and according to the provisions of the Lift Directive 2014/33/EU

Drive
- NdFeB magnets
- Structural width ≤ 340 mm for the narrowest shaft dimensions
- Noise emissions: < 50 dB(A)
- Insulation class F with temperature monitoring

Brake system
- Safety component according to the Lift Directive 2014/33/EU
- Separately activated brake circuits
- Deployable as an element of the ascending car overspeed protection means
- Deployable as part of the protection against unintended car movement

Deflection pulleys	Page 70
Forced ventilation	Page 71
ZAlift	Page 74
Motor cables	Page 112

Technical data

SM210

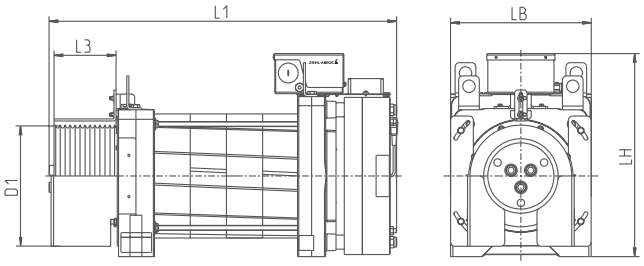

Motor type	Nominal torque Nm	Max. axle load kg	Nominal speed min⁻¹	Rated output power kW	L1 mm	LH mm	LB mm	D1 mm	L3 mm	Weight kg
SM210.60B	850	4400	60...258	5.3...21.6	806	491	340	240	150	420
							340	320		425
							430*	320		425
							420	400		450
							430*	400		450
							543	520		480
SM210.70B	1000	4400	60...258	6.3...25.7	856	491	340	240	150	445
							340	320		450
							430*	320		450
							420	400		470
							430*	400		470
							543	520		490

* at wrap angle < 180°

Scope of delivery and options

SM210	Standard	Options
Motor	Gearless elevator machine	-
Traction sheave	See D1	-
Brake	Certified brake system	Mechanical hand release
Brake monitoring	Microswitch	Inductive proximity switches
Motor cable	-	5 m, 10 m, 15 m, 20 m, 25 m halogen free
Absolute encoder type Heidenhain	ECN 1313 EnDat	ECN 1313 SSI, ERN 1387, ERN 1326
Rope guard	2 pieces	3. Rope guard
Temperature monitoring	PTC thermistor	PT100-thermistor
Cooling	Surface cooling	Forced ventilation

Resulting rope force

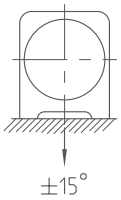

Example configurations

Other configurations, also outside of the examples listed below, are possible.
Our calculation software ZAlift is available to you for fast and convenient calculation of your elevator machine.

Suspension	Max. payload kg	Speed m/s	Motor type	Traction sheave mm	Rope Number x Ø mm	Motor power kW	Rated current A
1:1	675	1.0	SM210.60B	400	4 x 10	4.6	17.7
	800	1.0	SM210.60B	320	8 x 8	5.2	16.6
	1000	1.6	SM210.70B	320	10 x 8	10.1	30.7
2:1	1000	2.5	SM210.60B	520	3 x 13	18.1	48.5
	1250	1.6	SM210.60B	400	5 x 10	13.9	35.6
	1600	1.0	SM210.60B	320	10 x 8	11.1	29.8
	1600	1.6	SM210.70B	400	7 x 10	16.3	48.0
	2000	1.0	SM210.70B	320	10 x 8	13.5	35.4
4:1	3000	1.0	SM210.70B	400	6 x 10	20.1	55,9

ZAtop Gearless elevator machine

SM250.45 / SM250.60 / SM250.80

SM250.60B

SM250.80D

Synchronous motor actuated by permanent magnets and according to the provisions of the Lift Directive 2014/33/EU

Drive
- NdFeB magnets
- For fast elevators of up to 4 m/s
- Noise emissions: < 50 dB(A)
- Insulation class F with temperature monitoring

Brake system
- Safety component according to the Lift Directive 2014/33/EU
- Separately activated brake circuits
- Deployable as an element of the ascending car overspeed protection means
- Deployable as part of the protection against unintended car movement

Motor cables	Page 112
Machine frames	Page 60
Deflection pulleys	Page 70
Adapter plates	Page 69
Forced ventilation	Page 60
ZAlift	Page 74

Technical data

SM250

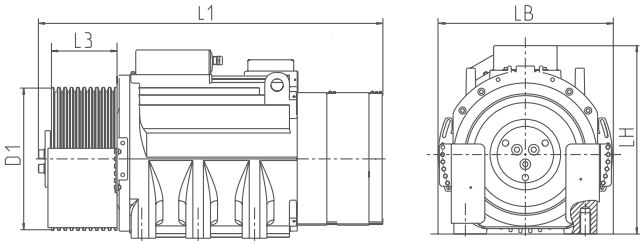

Motor type	Nominal torque Nm	Max. axle load kg	Nominal speed min⁻¹	Rated output power kW	L1 mm	LH mm	LB mm	D1 mm	L3 mm	Weight kg
SM250.45B	1120	6000	60...336	7.0...31.7	922	535	410	320	182	620
							425	400*	150	625
							445	400	186	635
							500	400*	186	635
							520	500	150	655
							543	520	150	665
							620	600	150	680
							660	640	150	735
SM250.60B	1600	6000	60...336	10.0...42.0	984	535	410	320	182	695
							425	400*	150	700
							445	400	186	715
							500	400*	186	715
							520	500	150	735
							543	520	150	740
							620	600	150	765
							660	640	150	810
SM250.80D	2000	8000	60...300	12.6...62.8	1147	645	474	440	200	1020
							528	440*		1021
							546	520		1041
							666	640		1128
SM250.80D-FB	2500	8000	54...276	14.1...72.3	1147	645	474	440	200	1020
							528	440*		1021
							546	520		1041
							666	640		1128

* at wrap angle < 180°

Scope of delivery and options

SM250	Standard	Options
Motor	Gearless elevator machine	-
Traction sheave	See D1	-
Brake	Certified brake system	Mechanical hand release
Brake monitoring	Microswitch	Inductive proximity switches
Motor cable	-	5 m, 10 m, 15 m, 20 m, 25 m halogen free
Absolute encoder type Heidenhain	ECN 1313 EnDat	ECN 1313 SSI, ERN 1387, ERN 1326
Rope guard	2 pieces	3. Rope guard
Temperature monitoring	PTC thermistor	PT100-thermistor
Cooling	Surface cooling	Forced ventilation

Resulting rope force

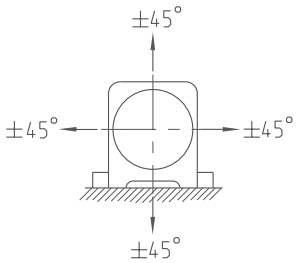

with lateral form lock support

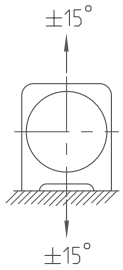

without lateral form lock support

Example configurations

Other configurations. also outside of the examples listed below. are possible.
Our calculation software ZAlift is available to you for fast and convenient calculation of your elevator machine.

Suspension	Max. payload kg	Speed m/s	Motor type	Traction sheave mm	Rope Number x Ø mm	Motor power kW	Rated current A
1:1	1000	1.0	SM250.45B	320	10 x 8	10.7	28.8
	1000	2.0	SM250.45B	320	10 x 8	13.4	35.2
	1000	1.6	SM250.60B	400	8 x 10	11.1	37.3
	1250	1.6	SM250.80D	520	7 x 11	13.5	58.9
	1250	2.5	SM250.80D	520	7 x 12	21.7	75.0
	1600	1.6	SM250.80D	440	9 x 11	17.3	63.8
	1600	2.5	SM250.80D	440	9 x 11	27.1	79.1
2:1	800	1.6	SM250.45B	600	4 x 10	10.5	30.7
	1000	1.6	SM250.45B	640	2 x 14	9.8	30.8
	1000	2.5	SM250.45B	320	6 x 8	19.5	45.7
	1250	2.5	SM250.45B	400	5 x 10	25.3	63.9
	1600	1.0	SM250.45B	320	10 x 8	12.6	37.7
	1600	1.6	SM250.60B	320	10 x 8	11.4	30.1
	1600	2.5	SM250.60B	500	5 x 11	11.3	38.1
	1600	4.0	SM250.80D	520	6 x 11	38.8	95.1
	1600	1.0	SM250.60B	600	7 x 10	11.6	46.9
	1600	1.0	SM250.80D	640	6 x 12	12.1	50.4
	1600	1.6	SM250.60B	640	3 x 16	15.6	41.8
	2000	1.6	SM250.45B	320	10 x 8	22.1	59.2
	2000	1.6	SM250.60B	400	8 x 10	22.9	60.8
	2000	2.5	SM250.80D	440	9 x 11	43.4	112.8
	2500	1.0	SM250.80D	440	8 x 11	18.3	68.5
	2500	2.0	SM250.80D	520	7 x 12	37.8	118.1
	2500	2.5	SM250.80D	440	9 x 11	48.1	161.8
	3000	1.6	SM250.80D	440	10 x 11	36.3	119.9
4:1	3000	1.0	SM250.45B	400	6 x 10	21.5	57.4
	4000	1.0	SM250.80D	440	8 x 11	31.6	81.6
	4500	1.0	SM250.80D	440	10 x 10	34.8	90.0
	6000	1.0	SM250.80D-FB	440	10 x 11	43.0	141.9

ZAtop Gearless elevator machine

SM250.100C

Synchronous motor actuated by permanent magnets and according to the provisions of the Lift Directive 2014/33/EU

Drive
- NdFeB magnets
- For fast elevators of up to 4 m/s
- Noise emissions: < 50 dB(A)
- Insulation class F with temperature monitoring

Brake system
- Safety component according to the Lift Directive 2014/33/EU
- Separately activated brake circuits
- Deployable as an element of the ascending car overspeed protection means
- Deployable as part of the protection against unintended car movement

Motor cables	Page 112
Machine frames	Page 60
Deflection pulleys	Page 70
ZAlift	Page 74

Technical data

SM250.100C

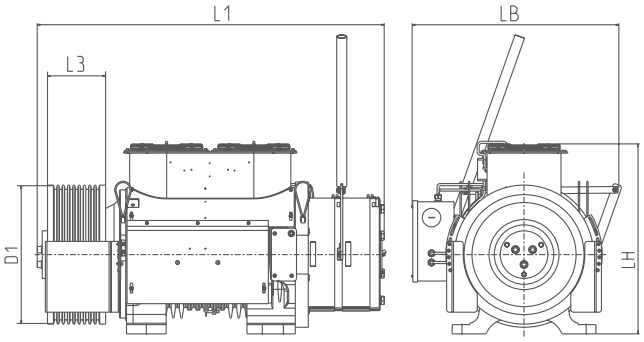

Motor type	Nominal torque	Max. axle load	Nominal speed	Rated output power	L1	LH	LB	D1	L3	Weight
	Nm	kg	min^{-1}	kW	mm	mm	mm	mm	mm	kg
SM250.100C	2100...2650	13000	78...312	22.0...69.0	1313	729	794	450	282	1250
								500	220	
								520	220	

Scope of delivery and options

SM250	Standard	Options
Motor	Gearless elevator machine	-
Traction sheave	See D1	-
Brake	Certified brake system	Mechanical hand release
Brake monitoring	Microswitch	Inductive proximity switches
Motor cable	-	5 m. 10 m. 15 m. 20 m. 25 m halogen free
Absolute encoder type Heidenhain	ECN 1313 EnDat	ECN 1313 SSI, ERN 1387, ERN 1326
Rope guard	2 pieces	3. Rope guard
Temperature monitoring	PTC thermistor	PT100-thermistor
Cooling	Surface cooling	Forced ventilation

Resulting rope force

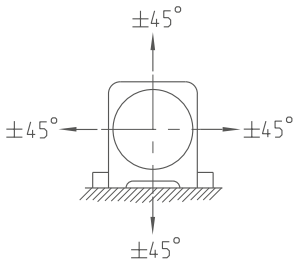

with lateral form lock support

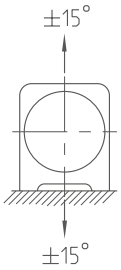

without lateral form lock support

Example configurations

Other configurations. also outside of the examples listed below. are possible.
Our calculation software ZAlift is available to you for fast and convenient calculation of your elevator machine.

Suspension	Max. payload kg	Speed m/s	Motor type	Traction sheave mm	Rope Number x Ø mm	Motor power kW	Rated current A
1:1	1250	1.0	SM250.100C	450	8 x 11	10.0	52.9
	1250	3.5	SM250.100C	450	8 x 11	26.5	80.2
	1350	1.0	SM250.100C	520	6 x 13	8.1	49.5
	1350	3.0	SM250.100C	520	6 x 13	24.4	65.5
	1600	1.0	SM250.100C	450	9 x 11	12.4	65.4
	1600	3.0	SM250.100C	450	9 x 11	28.7	79.7
	1800	1.0	SM250.100C	450	10 x 11	12.2	64.0
2:1	2000	1.0	SM250.100C	500	6 x 12	17.1	50.0
	2000	4.0	SM250.100C	500	6 x 12	49.0	113.7
	2500	1.0	SM250.100C	500	7 x 11	20.0	58.4
	2500	2.5	SM250.100C	500	7 x 11	50.0	116.6
	3500	1.0	SM250.100C	450	11 x 11	24.8	86.4
	3500	1.6	SM250.100C	450	11 x 11	39.7	103.3
4:1	4000	1.0	SM250.100C	520	5 x 13	34.0	104.2
	4000	1.6	SM250.100C	520	5 x 13	49.3	124.0
	5500	1.0	SM250.100C	500	9 x 11	40.5	119.4
	5500	1.2	SM250.100C	500	9 x 11	50.1	109.0
	6500	1.0	SM250.100C	450	10 x 11	47.4	125.7

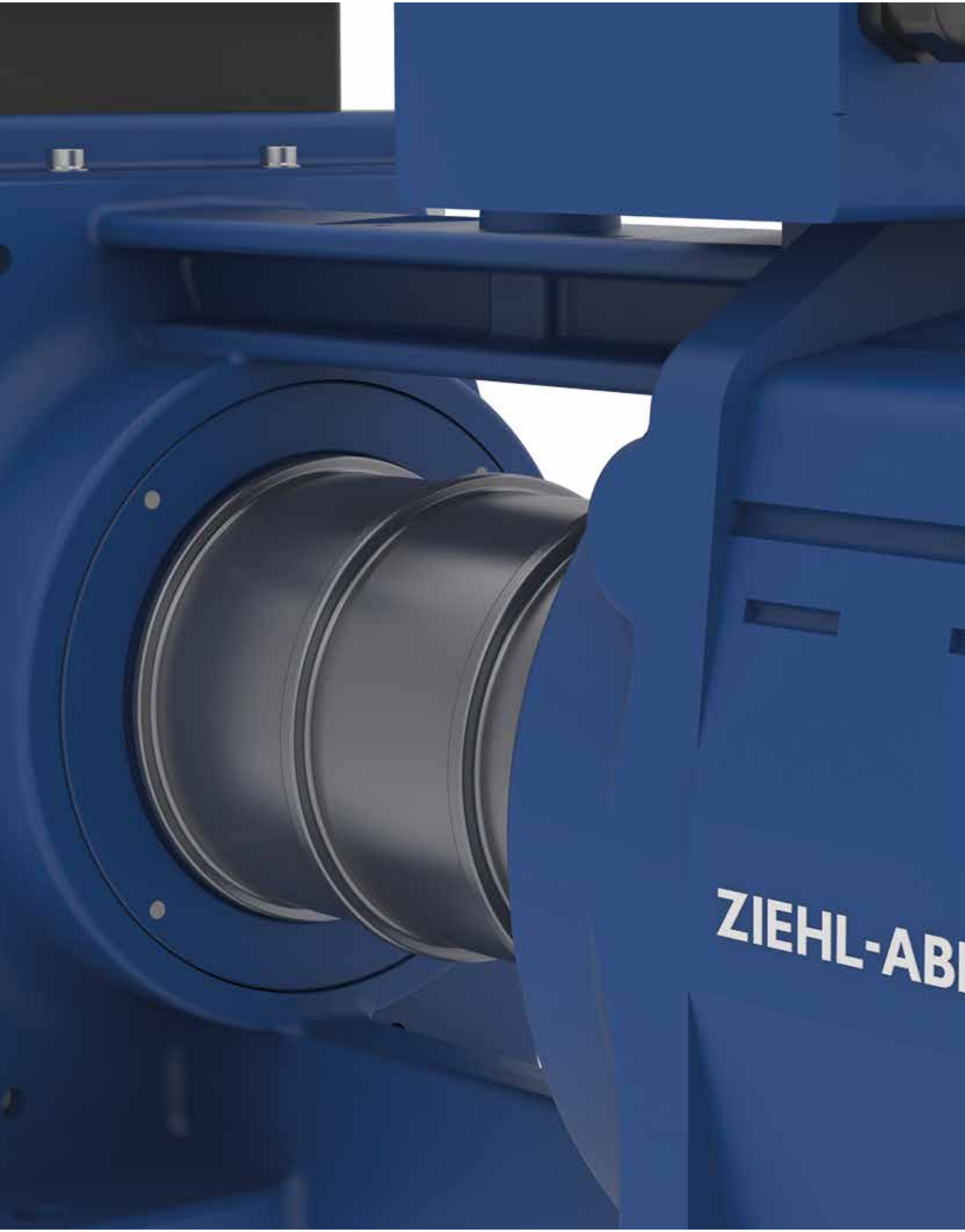
ZIEHL-AB

ZAtopx Gearless elevator machine for belts

Product overview

Information Page 36

ZAtopx BD132 Page 38

ZAtopx Gearless elevator machine for belts

General information

The drive with flat belts as suspension means for elevators with or without machine room

Properties

- Elevator machine with belt as suspension means
- According to the provisions of the Lift Directive 2014/33/EU
- High efficiency
- Noise emissions < 50 dB(A)
- Insulation class F (155 °C) with temperature monitoring via PTC thermistor
- Travel speeds up to 1,6 m/s
- Traction shaft:
  - Diameter 100 mm
  - 2 to 5 belts
- Motor brake:
  - Safety component according to the Lift Directive 2014/33/EU
  - Separately actuated brake circuits
  - Deployable as an element of the ascending car overspeed protection means
  - Deployable as part of the protection against unintended car movement
  - Mechanical hand release (optional)
- Can be equipped with conventional encoder systems (e. g. EnDat, SSI)
- Optimum package solution with ZAdyn frequency inverter from ZIEHL-ABEGG

A glimpse inside

① Absolute encoder
② Brake
③ Electrical junction box from brake
④ Housing
⑤ Electric terminal box drive
⑥ Drive shaft
⑦ Rotor with magnets
⑧ Stator lamination
⑨ Covering hood

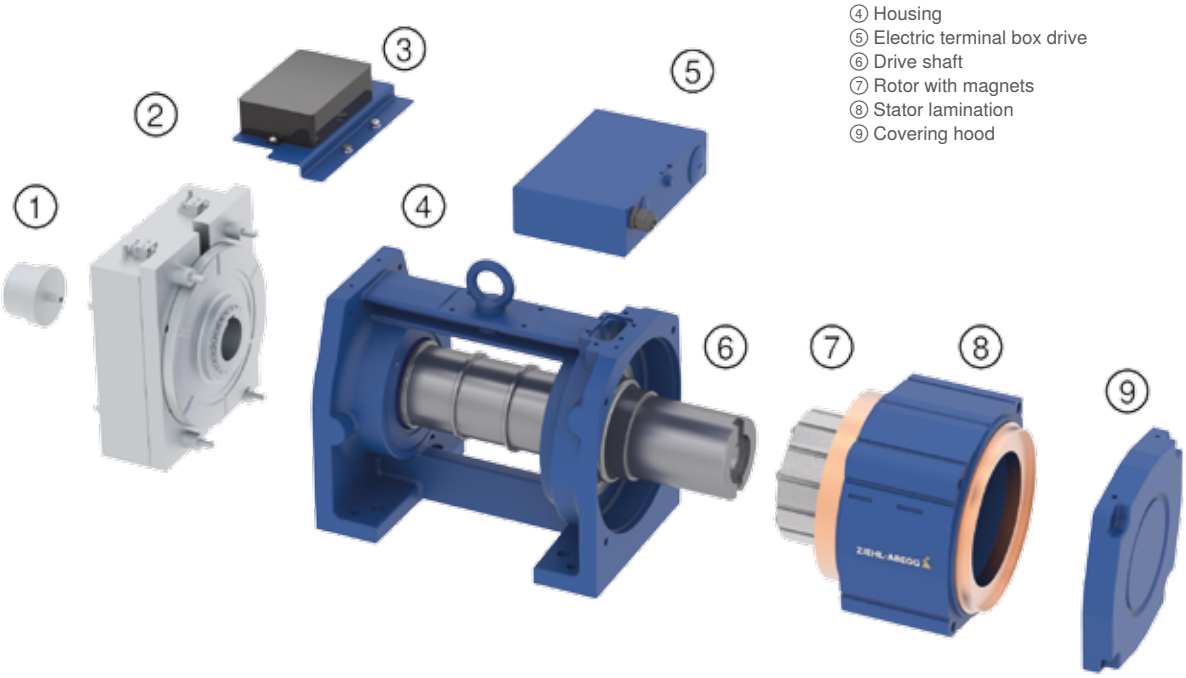

Product portfolio ZAtopx

ZIEHL-ABEGG offers you the most comprehensive range of gearless elevator machines with the greatest flexibility and variability.

Suspension	Rated load max. kg	Traction shaft diameter mm	Axle load kg	Torque Nm	ZAtopx		
2:1	675	100	2500	105	BD132.21A		Page 38
	1050	100	2500	175	BD132.35A		Page 38

ZAtopx Gearless elevator machine for belts

The drive with flat belts as suspension means in accordance to the provisions of the Lift Directive 2014/33/EU

Drive
- NdFeB magnets
- Structural width ≤ 205 mm for narrowest shaft dimensions
- Noise emissions: < 50 dB(A)
- Insulation class F with temperature monitoring

Brake system
- Safety component according to the Lift Directive 2014/33/EU
- Separately actuated brake circuits
- Deployable as an element of the ascending car overspeed protection means
- Deployable as part of the protection against unintended car movement

Motor cables	Page 112
ZAlift	Page 74

Technical data

BD132

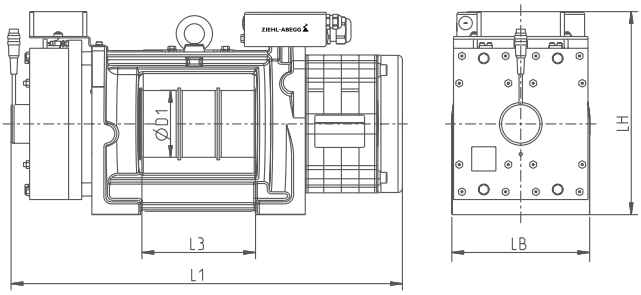

Motor type	Nominal torque	Max. payload	Nominal speed	Rated output power	L1	LH	LB	D1	L3	Weight
	Nm	kg	min^{-1}	kW	mm	mm	mm	mm	mm	kg
BD132.21A*	105	2500	384 + 612	4.2…6.7	581	302	205	100	169	110
BD132.35A*	175			7.0…11.2	651				169	125
BD132.35A**					767				285	135

*Traction shaft designed for 3 belts
**Traction shaft designed for 5 belts

Scope of delivery and options

BD132	Standard	Options
Motor	Gearless elevator machine for belts as suspension means	-
Traction shaft	See D1	-
Brake	Certified brake system	Mechanical hand release
Brake monitoring	Microswitch	Inductive proximity switches
Motor cable	-	5 m, 10 m, 15 m, 20 m, 25 m halogen free
Absolute encoder type Heidenhain	ECN 1313 EnDat	ECN 1313 SSI, ERN 1387, ERN 1326
Belt guard	2 pieces	-
Temperature monitoring	PTC thermistor	PT100-thermistor
Cooling	Surface cooling	Forced ventilation

Resulting suspension force

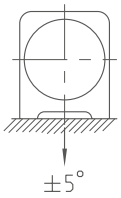

Example configurations

Other configurations, also outside of the examples listed below, are possible.
Our calculation software ZAlift is available to you for fast and convenient calculation of your elevator machine.

Suspension	Max. payload kg	Speed m/s	Motor type	Traction shaft Ø mm	Numbers of belts x belt width max.	Motor power kW	Rated current A
2:1	675	1.0	BD132.21A	100	2-3 x 33mm	4.2	11.0
	675	1.6	BD132.21A	100	2-3 x 33mm	6.7	17.0
	1050	1.0	BD132.35A	100	3-5 x 33mm	7.0	17.0
	1050	1.6	BD132.35A	100	3-5 x 33mm	11.2	27.0

ZIEHL-ABEGG

Gearless elevator machine ZAsyn

Product overview

Information Page 42

ZAsyn SM700 Page 44

ZAsyn SM860 Page 46

ZAsyn Gearless elevator machine

General information

The flat elevator machine for elevators with and without a machine room

Properties

- Gearless synchronous motor actuated by NdFeB permanent magnets
- External rotor motor
- According to the provisions of the Lift Directive 2014/33/EU
- Very flat design for optimum shaft dimensions
- Optimised for easy installation in the shaft
- High efficiency
- Noise emissions < 50 dB(A)
- Insulation class F (155 °C) with temperature monitoring via PTC thermistor
- Travel speeds of up to 3.0 m/s
- Rope diameter of 8.0 mm to 16.0 mm
- Traction sheaves:
  - Replaceable
  - Diameter of 400 mm to 680 mm
- Motor brake:
  - Safety component according to Lift Directive 2014/33/EU
  - Separately actuated brake circuits
  - Deployable as an element of the ascending car overspeed protection means
  - Deployable as part of the protection against unintended car movement
  - Mechanical hand release (optional)
- Can be equipped with conventional encoder systems (e.g. EnDat, SSI, SinCos)
- Optimum package solution with ZAdyn frequency inverter from ZIEHL-ABEGG

A glimpse inside

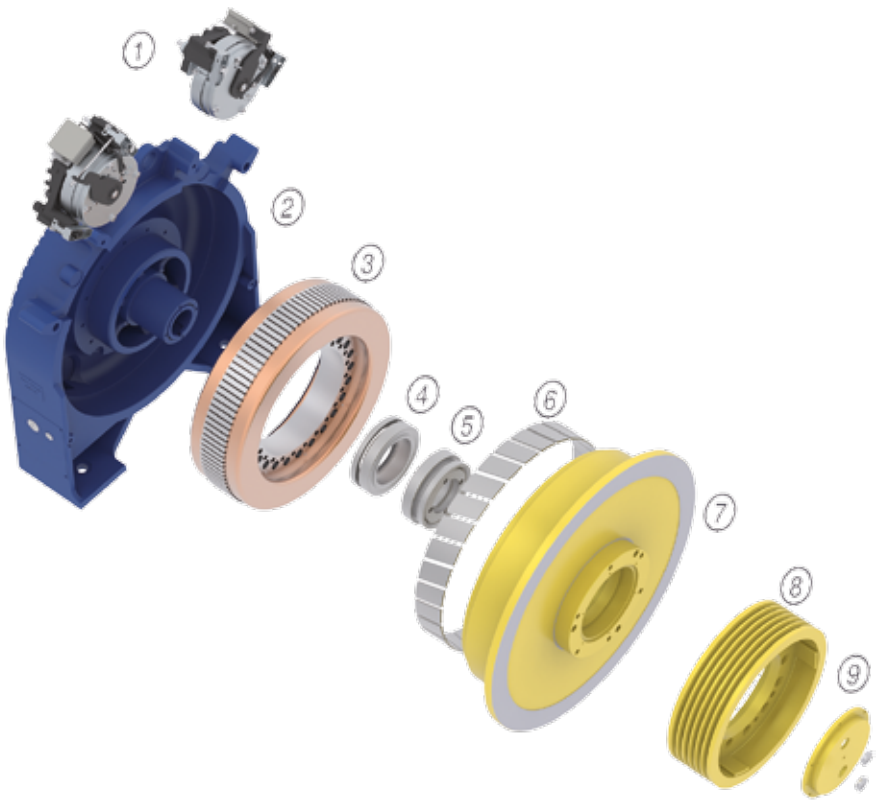

① Brake
② Housing
③ Stator lamination
④ Shaft seal ring
⑤ Shaft bearing
⑥ Magnets
⑦ Rotor
⑧ Traction sheave
⑨ Traction sheave bracket

Product portfolio ZAsyn

ZIEHL-ABEGG offers you the most comprehensive range of gearless elevator machines with the greatest flexibility and variability.

Suspension	Rated load max. kg	Traction sheave diameter mm	Axle load kg	Torque Nm	ZAsyn		
2:1	1200	400	3000	500	SM700.09		Page 44
	1600	400	3600	500...1150	SM700		Page 44
	2500	480...680	8000	2200	SM860		Page 46

ZAsyn Gearless elevator machine

SM700

Synchronous motor actuated by permanent magnets and according to the provisions of the Lift Directive 2014/33/EU

Drive
- NdFeB magnets
- Installation depth of ≤ 336 mm makes it perfect for mounting on the wall of the elevator shaft
- Noise emissions: < 50 dB(A)
- Insulation class F with temperature monitoring

Brake system
- Safety component according to the Lift Directive 2014/33/EU
- Separately activated brake circuits
- Deployable as an element of the ascending car overspeed protection means
- Deployable as part of the protection against unintended car movement

Motor cables	Page 112
Deflection pulleys	Page 70
ZAlift	Page 74

Technical data

SM700.09AL-14AL

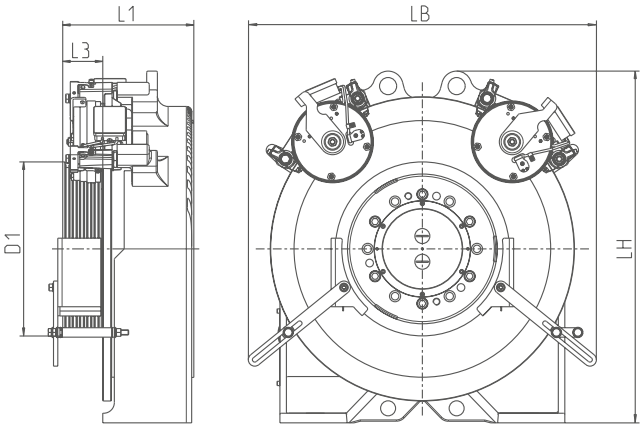

SM700.16AL(3)

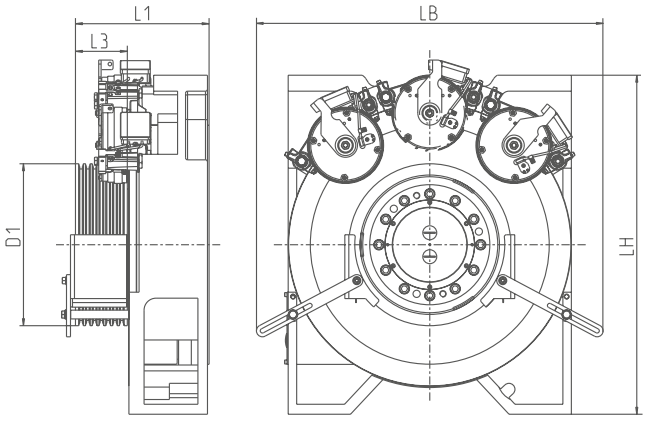

Motor type	Nominal torque	Max. axle load	Nominal speed	Rated output power	L1	LH	LB	D1	L3	Weight
	Nm	kg	min^{-1}	kW	mm	mm	mm	mm	mm	kg
SM700.09AL	500	3000	60...96	3.0...5.0	306	821	813	400	60	530
SM700.12AL	750	3000	60...168	4.5...13.0	336				90	535
SM700.14AL	850	3000	60...240	5.5...17.5	366				120	540
SM700.16AL	1000	3600	60...240	6.5...20.0	296	850	870	400	60	560
					326				90	565
					356				120	570
					366				130	575
SM700.16AL3	1150	3600	60...168	7.2...20.0	326	888	870	400	90	580
					356				120	595
					366				130	605

Scope of delivery and options

SM700	Standard	Options
Motor	Gearless elevator machine	-
Traction sheave	See D1	-
Brake	Certified brake system	Mechanical hand release
Brake monitoring	Microswitch	-
Motor cable	-	5 m, 10 m, 15 m, 20 m, 25 m halogen free
Absolute encoder type Heidenhain	ECN 1313 EnDat	ECN 1313 SSI, ERN 1387
Rope guard	2 pieces	-
Temperature monitoring	PTC thermistor	PT100-thermistor
Cooling	Surface cooling	-
Mounting	-	Console for wall mounting

Resulting rope force

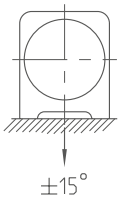

Example configurations

Other configurations, also outside of the examples listed below, are possible.
Our calculation software ZAlift is available to you for fast and convenient calculation of your elevator machine.

Suspension	Max. payload kg	Speed m/s	Motor type	Traction sheave mm	Rope Number x Ø mm	Motor power kW	Rated current A
1:1	320	2.0	SM700.09AL	400	3 x 10	5.0	11.5
	630	3.0	SM700.14AL	400	5 x 10	14.0	33.5
	500	3.0	SM700.12AL	400	4 x 10	13.0	32.5
	675	2.0	SM700.16AL	400	6 x 10	10.0	25.0
	800	2.0	SM700.16AL3	400	7 x 10	11.6	29.0
2:1	675	1.0	SM700.09AL	400	3 x 10	5.0	12.2
	1000	1.6	SM700.12AL	400	4 x 10	12.0	29.0
	1000	2.0	SM700.14AL	400	5 x 10	17.0	40.5
	1000	2.5	SM700.14AL	400	5 x 10	17.5	43.0
	1200	2.0	SM700.14AL	400	6 x 10	17.0	40.6
	1250	2.5	SM700.16AL	400	6 x 10	20.0	50.0
	1350	2.0	SM700.16AL	400	6 x 10	18.0	50.0
	1500	1.6	SM700.16AL3	400	7 x 10	18.8	45.0
	1600	1.0	SM700.16AL3	400	7 x 10	11.6	29.0

ZAsyn Gearless elevator machine

SM860

Synchronous motor actuated by permanent magnets and according to the provisions of the Lift Directive 2014/33/EU

Drive
- NdFeB magnets
- Perfect for mounting in tight spaces
- Noise emissions: < 50 dB(A)
- Insulation class F with temperature monitoring

Brake system
- Safety component according to the Lift Directive 2014/33/EU
- Separately activated brake circuits
- Deployable as an element of the ascending car overspeed protection means
- Deployable as part of the protection against unintended car movement

Motor cables	Page 112
Deflection pulleys	Page 70
ZAlift	Page 74

Technical data

SM860.28AL

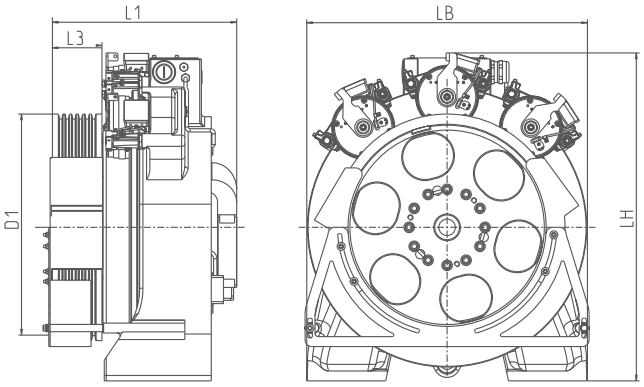

Motor type	Nominal torque	Max. axle load	Nominal speed	Rated output power	L1	LH	LB	D1	L3	Weight
	Nm	kg	min^{-1}	kW	mm	mm	mm	mm	mm	kg
SM860.28AL	2200	8000	40...196	9.2...39.0	586	993	860	480	150	1004
								520		1010
								600		1027
								680		1050

Scope of delivery and options

SM860	Standard	Options
Motor	Gearless elevator machine	-
Traction sheave	See D1	-
Brake	Certified brake system	Mechanical hand release
Brake monitoring	Microswitch	-
Motor cable	-	5 m, 10 m, 15 m, 20 m, 25 m halogen free
Absolute encoder type Heidenhain	ECN 1313 EnDat	ECN 1313 SSI, ERN 1387
Rope guard	2 pieces	-
Temperature monitoring	PTC thermistor	PT100-thermistor
Cooling	Forced ventilation	-

Resulting rope force

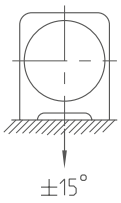

Example configurations

Other configurations, also outside of the examples listed below, are possible.
Our calculation software ZAlift is available to you for fast and convenient calculation of your elevator machine.

Suspension	Max. payload kg	Speed m/s	Motor type	Traction sheave mm	Rope Number x Ø mm	Motor power kW	Rated current A
1:1	1000	2.5	SM860.28AL	600	5 x 13	22.0	52.7
	1200	3.0	SM860.28AL	480	7 x 12	30.0	55.0
	1250	2.0	SM860.28AL	480	7 x 12	22.0	53.5
2:1	2000	2.5	SM860.28AL	600	4 x 13	39.0	78.1
	2500	1.0	SM860.28AL	480	7 x 12	22.0	53.5
	2500	2.5	SM860.28AL	480	6 x 12	39.0	77.8

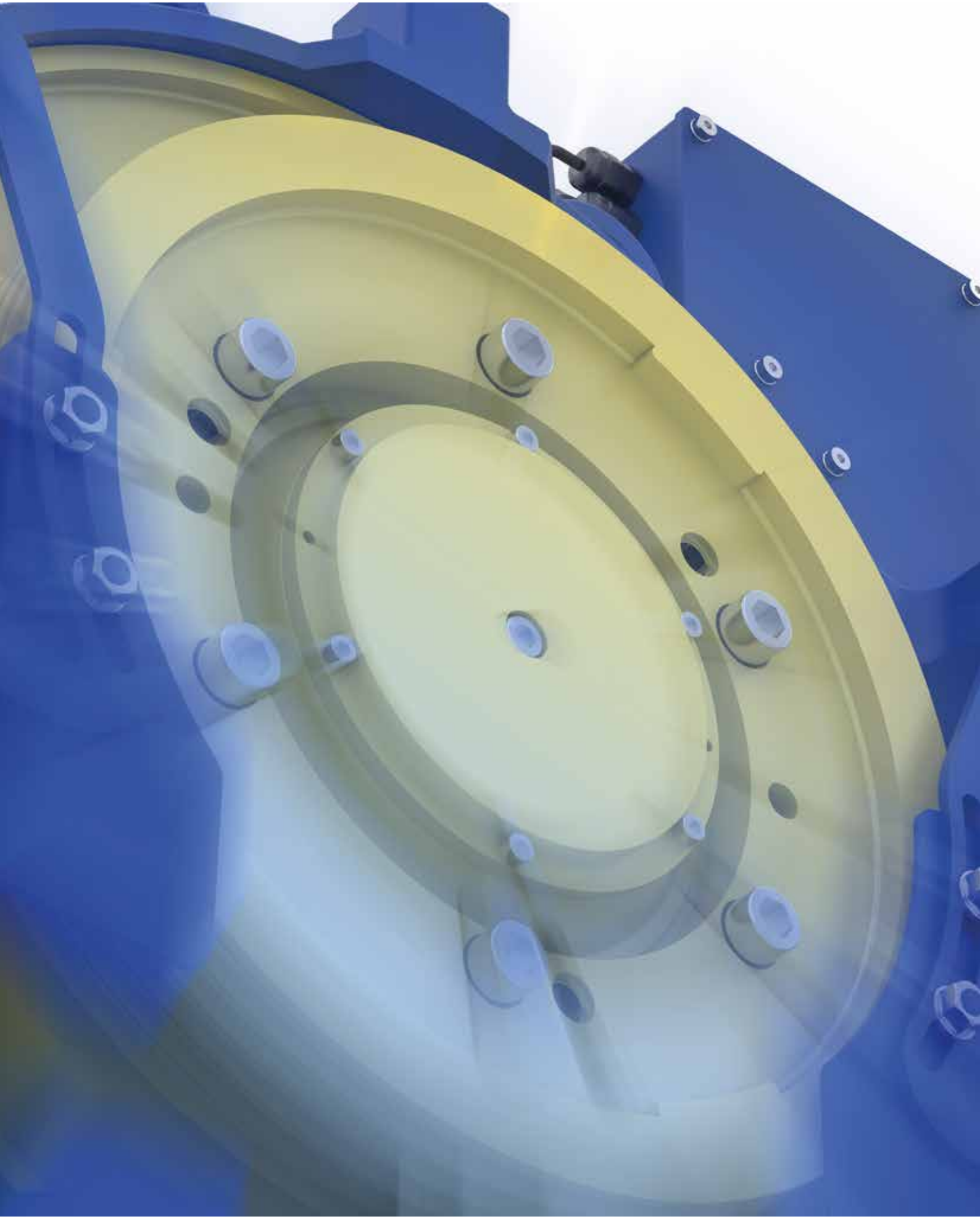

Gearless elevator machine ZAdisc

Product overview

Information Page 50

ZAdisc SL506 / 510 Page 52

ZAdisc Gearless elevator machine

General information

The flat elevator machine for elevators with and without a machine room

Properties

- Gearless synchronous motor actuated by NdFeB permanent magnets
- Disc rotor motor
- According to the provisions of the Lift Directive 2014/33/EU
- Very flat design for optimum shaft dimensions
- Optimised for fixing at the guide rail
- High efficiency
- Noise emissions <50 dB(A)
- Insulation class F (155 °C) with temperature monitoring via PTC thermistor
- Travel speeds of up to 1.6 m/s
- Rope diameter of 8.0 mm to 12.0 mm
- Traction sheaves:
  - Replaceable
  - Diameter of 400 mm to 480 mm
- Motor brake:
  - Safety component according to Lift Directive 2014/33/EU
  - Separately actuated brake circuits
  - Deployable as an element of the ascending car overspeed protection means
  - Deployable as part of the protection against unintended car movement
- Can be equipped with conventional encoder systems (e.g. EnDat, SSI, SinCos)
- Optimum package solution with ZAdyn frequency inverter from ZIEHL-ABEGG

A glimpse inside

① Brake
② Housing
③ Junction box
④ Shaft bearing
⑤ Stator lamination
⑥ Magnets
⑦ Rotor
⑧ Shaft bearing
⑨ Traction sheave
⑩ Cover plate

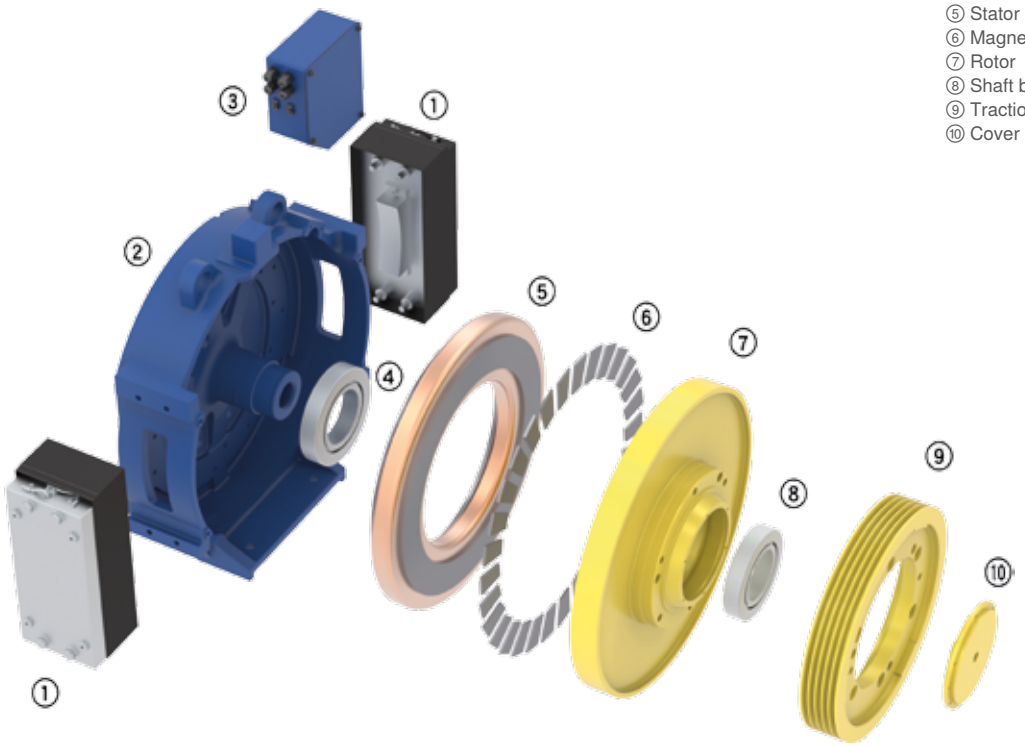

Product portfolio ZAdisc

With the gearless elevator machines ZAdisc ZIEHL-ABEGG offers you the greatest flexibility and variability.

Suspension	Rated load max. kg	Traction sheave diameter mm	Axle load kg	Torque Nm	ZAdisc		
2:1	675	400	1800	500	SL506	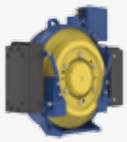	Page 52
	1125	480	2400	960	SL510		Page 52

ZAdisc Gearless elevator machine

SL506 / 510

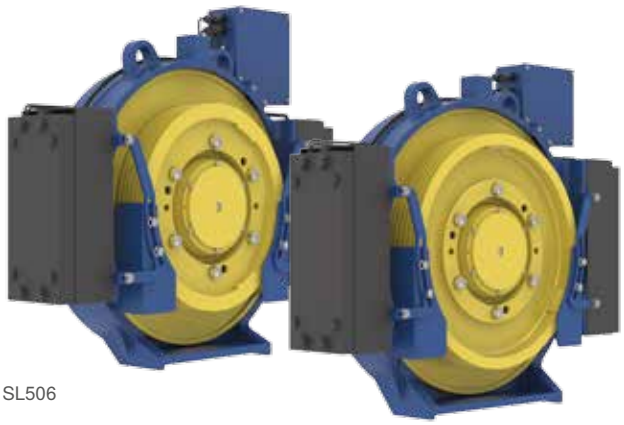

SL506

SL510

Synchronous motor actuated by permanent magnets and according to the provisions of the Lift Directive 2014/33/EU

Drive
- NdFeB magnets
- Installation depth ≤ 200 mm
- Optimised for attaching to the guide rail
- Noise emissions: < 50 dB(A)
- Insulation class F with temperature monitoring

Brake system
- Safety component according to the Lift Directive 2014/33/EU
- Separately activated brake circuits
- Deployable as an element of the ascending car overspeed protection means
- Deployable as part of the protection against unintended car movement

Motor cables	Page 112
Deflection pulleys	Page 70
ZAlift	Page 74

Technical data

SL506 / SL510

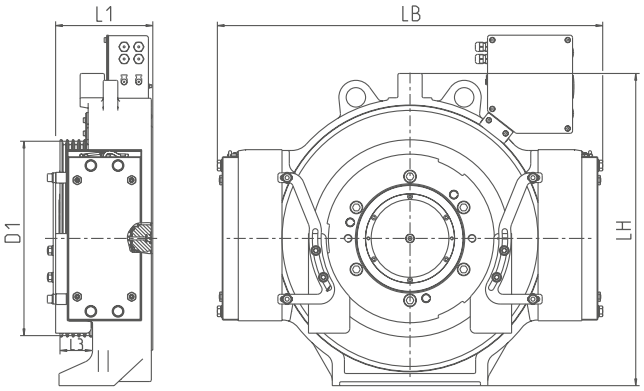

Motor type	Nominal torque	Max. axle load	Nominal speed	Rated output power	L1	LH	LB	D1	L3	Weight
	Nm	kg	min^{-1}	kW	mm	mm	mm	mm	mm	kg
SL506	560	1800	240	5.0...8.2	193	721	793	400	66	310
SL510	960	2400	200	7.4...18.0	193	770	854	480	76	380

Scope of delivery and options

SL506 / SL510	Standard	Options
Motor	Gearless elevator machine	-
Traction sheave	See D1	-
Brake	Certified brake system	-
Brake monitoring	Microswitch	Inductive proximity switches
Motor cable	-	5 m, 10 m, 15 m, 20 m, 25 m halogen free
Absolute encoder type Heidenhain	ECN 1313 EnDat	ECN 1313 SSI, ERN 1387
Rope guard	2 pieces	3. Rope guard
Temperature monitoring	PTC thermistor	PT100-thermistor
Cooling	Surface cooling	-
Mounting	-	Mounting bracket and bracket for rail mounting

Resulting rope force

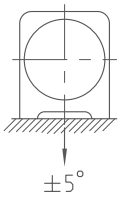

Example configurations

Other configurations, also outside of the examples listed below, are possible.
Our calculation software ZAlift is available to you for fast and convenient calculation of your elevator machine.

Suspension	Max. payload kg	Speed m/s	Motor type	Traction sheave mm	Rope Number x Ø mm	Motor power kW	Rated current A
2:1	480	1.0	SL506.12	400	3 x 8	3.2	11.0
	480	1.6	SL506.12	400	3 x 8	5.5	18.4
	630	1.0	SL506.12	400	3 x 10	4.4	14.8
	675	1.6	SL506.12	400	3 x 10	7.9	26.3
	1000	1.6	SL510.17	480	4 x 10	11.4	41.1
	1050	1.0	SL510.17	480	4 x 10	7.0	26.9
	1125	1.0	SL510.17	480	5 x 8	7.0	28.0

Motors VFD

Motors VFD

Frequency controlled elevator motors

Description

- Surface-cooled asynchronous motor
- Especially for elevator machines with gearbox
- High efficiency
- Frequency controllable
- Optimised for low-noise operation
- Operating voltage 360 V AC
- Design IM B3

Options

- Hand wheel with low moment of inertia
- Incremental encoder in different signal forms and resolutions

Motor cables Page 112

Technical data

Motor type	Rated frequency Hz	Rated power kW	Rated torque Nm	Rated current A	Rated speed min^{-1}
VFD132M-4	38 50 66	4.0 5.5 7.5	37	9.7 13.0 17.5	1090 1453 1934
VFD132MA-4	38 50 66	5.5 7.5 10.0	50	13.1 17.8 22.7	1093 1451 1933
VFD132MB-4	38 50 66	6.8 9.2 12.0	61	15.8 21.0 27.4	1089 1448 1929
VFD160LA-4	38 50 66	8.5 11.0 14.5	72	18.0 24.0 31.0	1113 1469 1953
VFD160LB-4	38 50 66	11.5 15.0 20.0	100	24.0 32.5 42.0	1113 1471 1953
VFD180L-4	38 50 66	16.5 22.0 29.0	144	34.5 46.0 60.0	1115 1476 1955
VFD200L-4	38 50 66	23.0 30.0 40.0	197	47.0 64.0 81.0	1122 1479 1962
VFD225M-4	38 50 66	28.0 37.0 50.0	242	60.0 79.0 104.0	1120 1468 1960
VFD225M-4	38 50 60	34.0 45.0 60.0	292	70.0 91.0 121.0	1119 1483 1959
VFD250M-4	38 50 66	42.0 55.0 73	357	85.0 116.0 146.0	1119 1480 1959

Dimensions mm

VFD132..., VFD160...

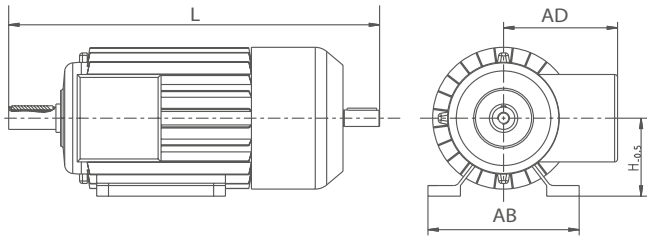

VFD180..., VFD200..., VFD225..., VFD250..., VFD280...

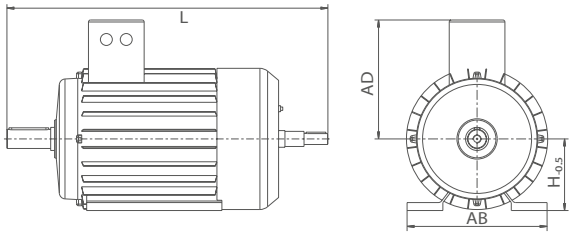

Motor type	D mm	L mm	AB mm	AD mm	H mm
VFD132M-4	38	613	256	193	132
VFD132MA-4					
VFD132MB-4		628			
VFD160LA-4	42	742	320	250	160
VFD160LB-4					
VFD180L-4	48	807	352	299	180
VFD200L-4	55	857	403	299	200
VFD225M-4	60	925	440	238	225
VFD250M-4	65	1004	490	361	250
VFD280S-4	75	1054	536	361	280
VFD280M-4					

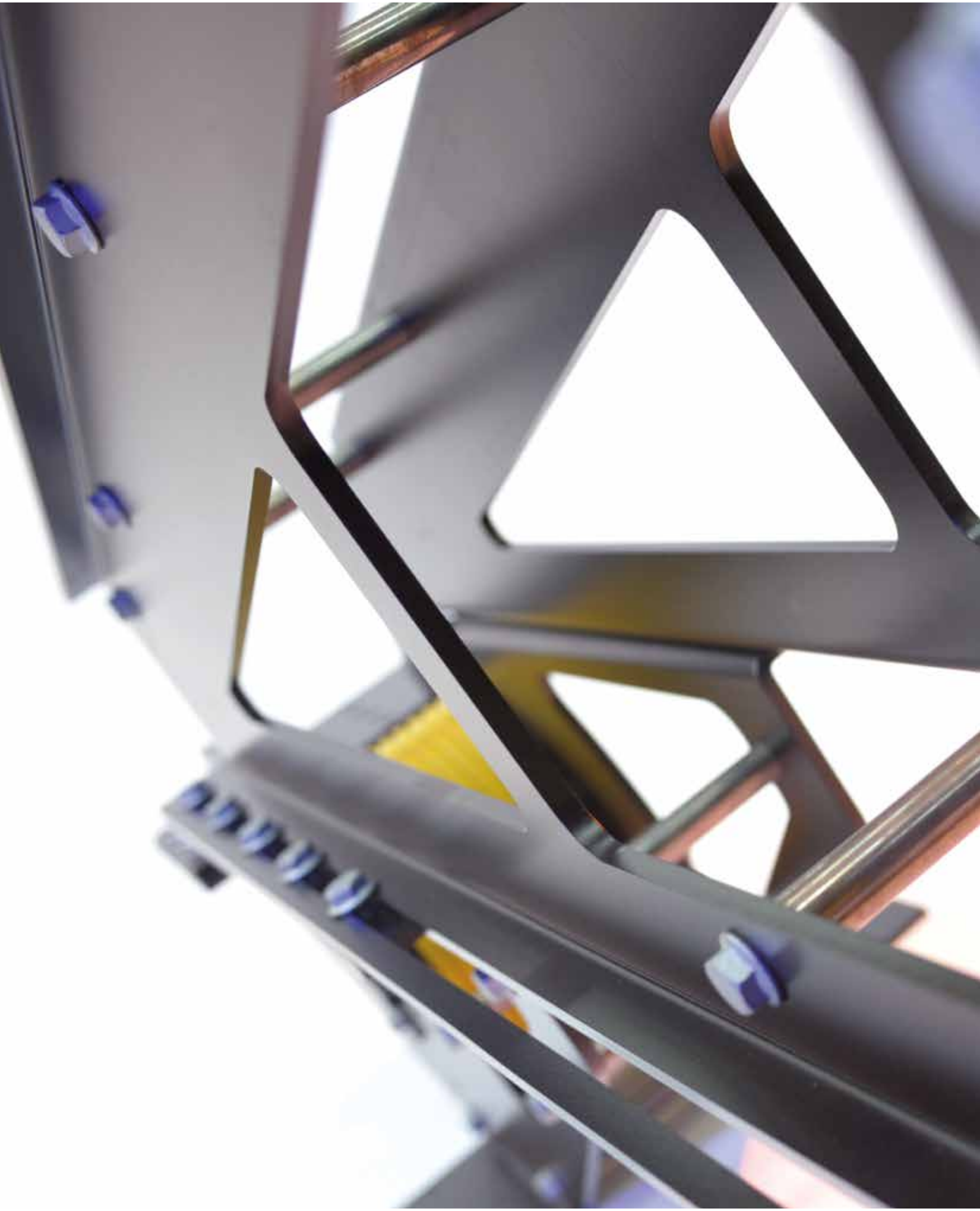

System components

Product overview

ZAframe MH4000	Page 60
ZAframe MH6000	Page 61
ZAframe MF2800 / MF4000 / MF6000	Page 62
ZAframe MS4000 / MS8000	Page 64
ZAframe MD13000	Page 66
ZAframe MK2800	Page 67
ZAframe MN3000	Page 68
Adapter plates	Page 69
Deflection pulleys	Page 70
Forced ventilation ZAtop	Page 71
Oil heating motors	Page 72
Tool set	Page 73
ZAlift	Page 74

ZAframe MH4000

Elevated frame for ZAtop SM200.15C - SM200.45D

Description

- Elevated frame with one deflection pulley
- Screwed sheet metal design
- Static load: up to 4,000 kg
- Typical payload: 630 kg to 1,600 kg
- Rope distance (ASL): 400 mm to 1,330 mm, adjustable in 40 mm steps
- Traction sheave: 160 mm to 500 mm
- Deflection pulley: 160 mm to 520 mm
- Version as illustrated or motor turned through 180°
- Can be delivered assembled or unassembled

Scope of delivery

- Frame with fastening material
- Deflection pulley with fastening material
- Insulating elements

Options

- Nip guard
- Different traction sheaves and deflection pulleys

MH4000					
Motor type	Traction sheave D1	Deflection pulley	ASL	Max. static load	**Article no.**
	mm	mm	mm	kg	
SM200.15C/20C/30C	240	240	420 - 1140		**70028158**
SM200.15C/20C/30C	320	320	500 - 1220		**70028161**
SM200.15C/20C/30C	400	400	500 - 1260		**70028162**
SM200.40D/45D	160	160	420 - 1060		**70028159**
SM200.40D/45D	240	240	420 - 1140		**70028160**
SM200.40D/45D	320	320	500 - 1220		**70028163**
SM200.40D/45D	400	400	500 - 1260		**70028164**
SM200.40D/45D	500	520	500 - 1280		**70028166**

Dimensions mm

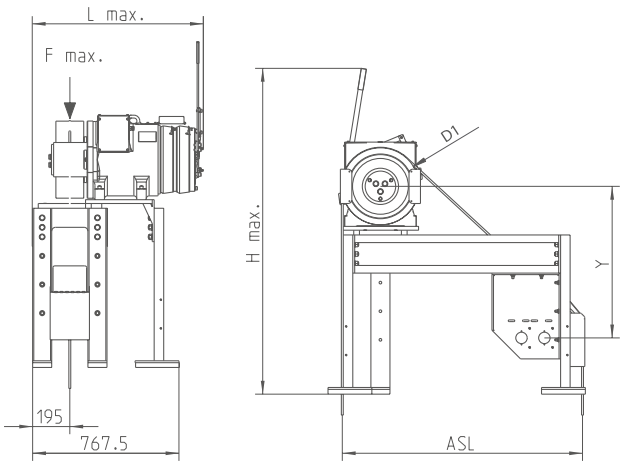

Motor type	Y	H max.	L max.
	mm	mm	mm
SM200.15C/20C/30C	680	1323	763
SM200.40D/45D	797	2045	879

ZAframe MH6000

Elevated frame for ZAtop SM250.45B - SM250.80D

Description

- Elevated frame with one deflection pulley
- Screwed sheet metal design
- Static load: up to 6,000 kg
- Typical payload: 630 kg to 3,000 kg
- Rope distance (ASL): 545 mm to 1,080 mm
- Traction sheave: 400 mm to 640 mm
- Deflection pulley: 400 mm to 520 mm
- Version as illustrated or motor turned through 180°

Scope of delivery

- Frame with fastening material
- Deflection pulley with fastening material
- Insulating elements

Options

- Nip guard
- Frame
- Different traction sheaves and deflection pulleys

MH6000					
Motor type	Traction sheave D1	Deflection pulley D2	ASL	Max. static load	**Article no.**
	mm	mm	mm	kg	
SM250.45B SM250.60B	400	400	545 - 925	6000	**70029130**
	500	520	655 - 1010		**70029132**
	520	520	665 - 1020		**70029132**
	600	520	705 - 1060		**70029133**
	640	520	725 - 1080		**70029133**
SM250.80D	440	400	565 - 945		**70029130**
	520	520	665 - 1020		**70029131**
	640	520	725 - 1080		**70029132**

Dimensions mm

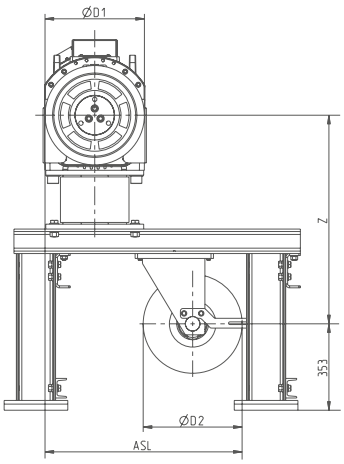

Motor type	D1	D2	Z
	mm	mm	mm
SM250.45B	400	400	852
	500	520	902
	520	520	902
	600	520	952
	640	520	952
SM250.60B	400	400	852
	500	520	902
	520	520	902
	600	520	952
	640	520	952
SM250.80D	440	400	894
	520	520	894
	640	520	944

ZAframe MF2800 + MF4000

Flat frame for ZAtop SM160.30B - SM200.45D

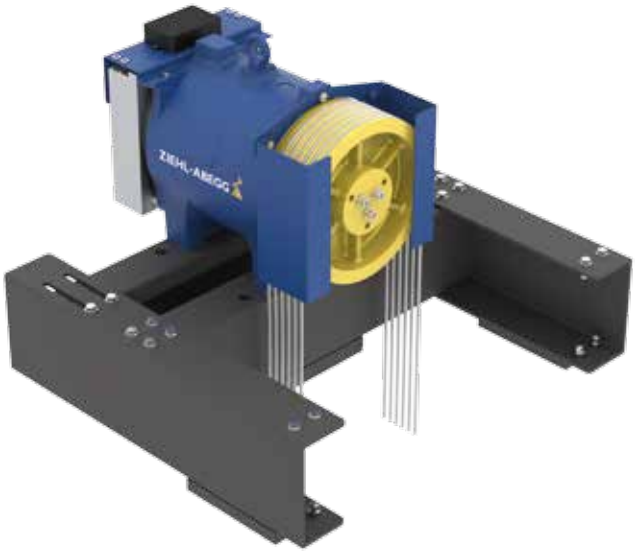

Description

- Flat frame
- Screwed sheet metal design
- Static load: up to 4,000 kg
- Typical payload: 630 kg to 1,600 kg
- Can be delivered assembled or unassembled

Scope of delivery

- Frame with fastening material
- Insulating elements

MF2800 / MF4000			
Motor type	Traction sheave D1 mm	Max. static load kg	**Article no.**
SM160.30B/S SM160.40B/S SM190.15/23 SM200.15C/20C/30C	160 - 240 200 - 240 160 - 450	2800	**70028278**
SM200.40D/45D	160 - 500	4000	**70028279**

Dimensions mm

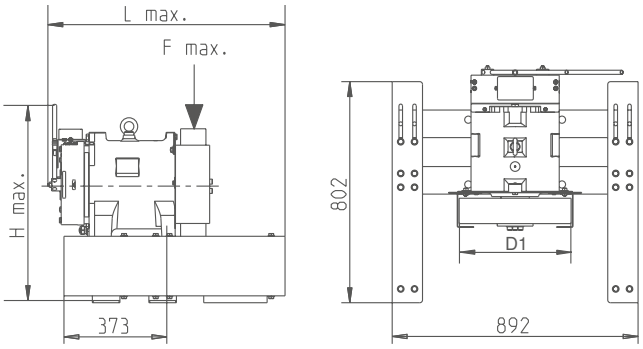

Motor type	H max. mm	L max. mm
SM160.30B/S SM160.40B/S	853	896
SM190.15/23	681	777
SM200.15C/20C/30C	860	833

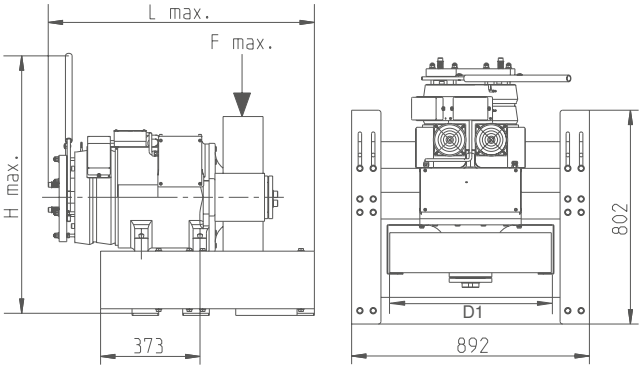

Motor type	H max. mm	L max. mm
SM200.40D/45D	1406	1117

ZAframe MF6000

Flat frame for ZAtop SM250.45B - SM250.80D

Description

- Flat frame
- Welded sheet metal design
- Static load: up to 6,000 kg
- Typical payload: 1,000 kg to 3,600 kg
- Can be delivered assembled or unassembled

Scope of delivery

- Frame with fastening material
- Insulating elements

MF6000			
Motor type	Traction sheave D1 mm	Max. static load kg	**Article no.**
SM250.45B	320	6000	**70030605**
SM250.60B			
SM250.45B	400		
SM250.60B			
SM250.80D	440		**70030602**
SM250.45B	500		**70030606**
SM250.60B			
SM250.45B	520		
SM250.60B			
SM250.80D			**70030603**
SM250.45B	600		**70030607**
SM250.60B			
SM250.45B	640		**70030607**
SM250.60B			
SM250.80D			**70030604**

Dimensions mm

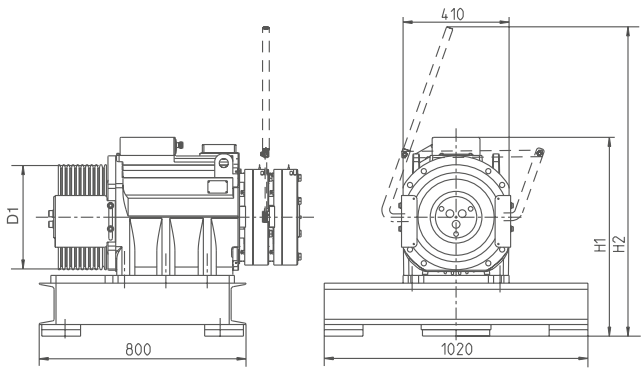

Motor type	D1 mm	H1 mm	H2 mm
SM250.45B	320	780	915
	400	780	915
	500	830	965
	520	830	965
	600	890	1025
	640	890	1025
SM250.60B	320	780	1207
	400	780	1207
	500	830	1257
	520	830	1257
	600	890	1317
	640	890	1317
SM250.80D	440	880	1334
	520	930	1384
	640	980	1434

ZAframe MS4000

Frame S-wrap for ZAtop SM160 - SM200.45D

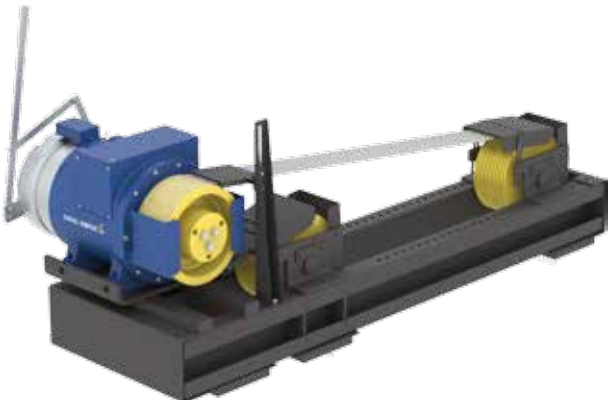

Description

- Frame with two deflection pulleys
- Screwed sheet metal design
- Static load: up to 4,000 kg
- Typical payload: 630 kg to 1,600 kg
- Rope distance (ASL): 360 mm to 1,200 mm, adjustable in 40 mm steps
- Traction sheave: 200 mm to 400 mm
- Deflection pulley: 240 mm to 400 mm
- Version as illustrated or motor turned through 180°
- Can be delivered assembled or unassembled

Scope of delivery

- Frame with fastening material
- Deflection pulley with fastening material
- Insulating elements

Options

- Nip guard
- Different traction sheaves and deflection pulleys

MS4000				
Motor type	Traction sheave D1 mm	ASL mm	Max. static load kg	**Article no.**
SM160.30B/S SM160.40B/S	240	400 - 1200	4000	**70028387**
SM200.15C/20C/30C	240	400 - 1200		**70028388**
SM200.15C/20C/30C	320 400	440 - 1200 520 - 1200		**70028390**
SM200.40D/45D	240	400 - 1200		**70028389**
SM200.40D/45D	320 400	440 - 1200 520 - 1200		**70028391**

Dimensions mm

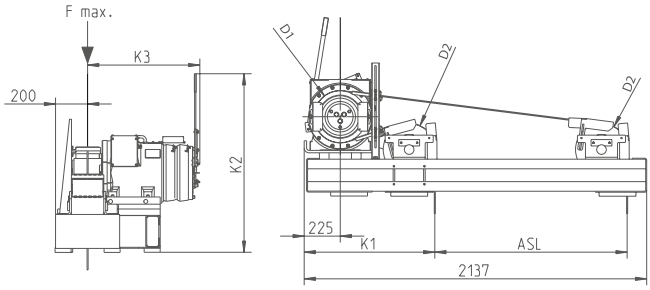

Motor type	D1 mm	D2 mm	K1 mm	K2 mm	K3 mm
SM160.30B/S SM160.40B/S	240	240	775	960	540
SM200.15C/20C/30C	240	240	775	960	535
SM200.40D/45D	240	240	775	1510	810
SM200.15C/20C/30C	320	320	815	940	535
	400	400	855	940	535
SM200.40D/45D	320	320	815	1510	810
	400	400	855	1510	810

ZAframe MS8000

Frame S-wrap for ZAtop SM250.60B - 250.80D

Description

- Frame with two deflection pulleys
- Screwed sheet metal design
- Static load: up to 8,000 kg
- Typical payload: 1,000 kg to 3,000 kg
- Rope distance (ASL): 400 mm to 1,400 mm, adjustable in 40 mm steps
- Traction sheave: 320 mm to 520 mm
- Deflection pulley: 320 mm to 520 mm
- Version as illustrated or motor turned through 180°
- Can be delivered assambled or unassembled

Scope of delivery

- Frame with fastening material
- Deflection pulley with fastening material
- Insulating elements

Options

- Nip guard
- Different traction sheaves and deflection pulleys

MS8000					
Motor type	Traction sheave D1 mm	Deflection pulley D2 mm	ASL mm	Max. static load kg	**Article no.**
SM250.60B	320	320	400 - 1400	8000	**70028060** **70028308**
SM250.60B	400	400	440 - 1400		**70028058** **70028302**
SM250.60B	520	520	560 - 1400		**70028061** **70028062**
SM250.80D	440	400	560 - 1400		**70028063** **70028309**
SM250.80D	520	520	560 - 1400		**70028064** **70028350**

Dimensions mm

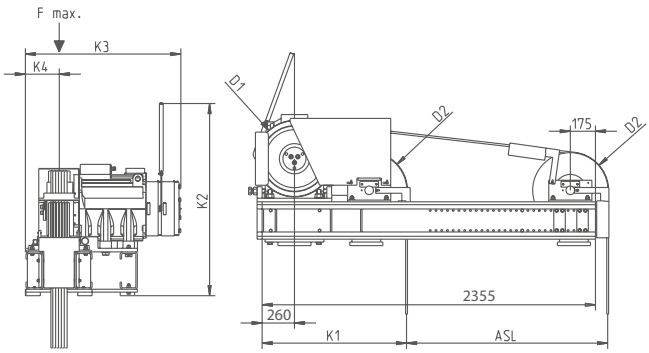

Motor type	D1 mm	K1 mm	K2 mm	K3 mm	K4 mm
SM250.60B	320	905	1345	1250	236
	400	945	1345	1250	236
	520	1005	1345	1250	236
SM250.80D	440	1005	1430	1230	229
	520	1065	1430	1230	229

ZAframe MD13000

Frame for double wrap for ZAtop SM250.100C

Description

- Frame with one deflection pulley
- Welded / screwed construction
- Static load: up to 13,000 kg
- Typical payload: 1,000 kg to 3,500 kg
- Rope distance (ASL): 1,020 mm to 1,455 mm, adjustable in 50 mm steps
- Traction sheave: 450 mm to 520 mm
- Deflection pulley: 520 mm
- Version as illustrated or motor turned through 180°

Scope of delivery

- Frame with fastening material
- Deflection pulley with fastening material
- Nip guard
- Rope guard
- Insulating elements

MD13000					
Motor type	Traction sheave D1 mm	Max. static load kg	Deflection pulley mm	ASL mm	**Article no.**
SM250.100C	450	13000	520	1020 - 1420	**70030408** **70030415**
SM250.100C	500			1045 - 1445	**70030413** **70030416**
SM250.100C	520			1055 - 1455	**70030414** **70030417**

Dimensions mm

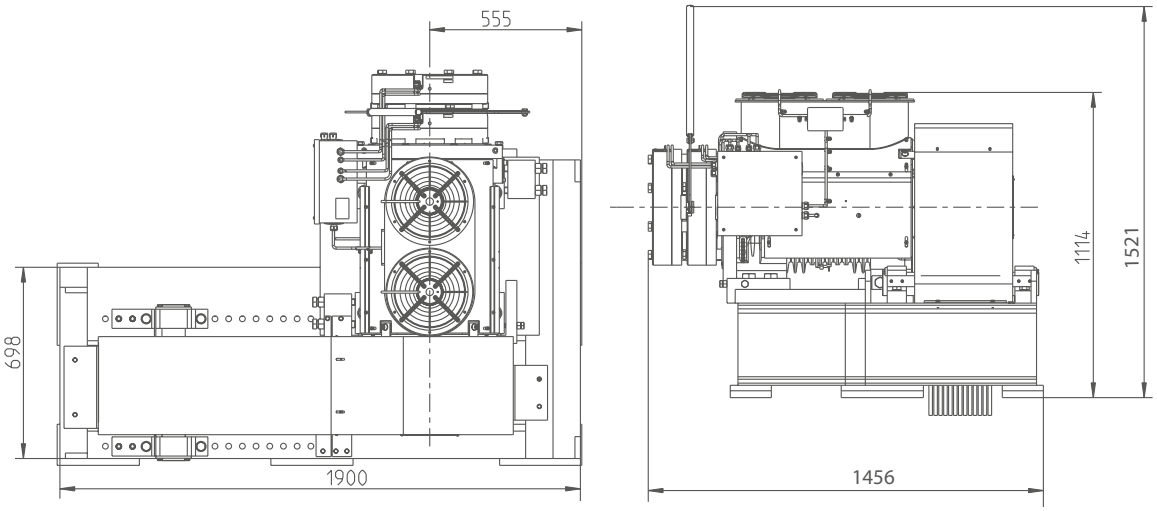

ZAframe MK2800

Frame for ZAtop SM132 - SM200.30C

Description

- Frame with one deflection pulley
- Screwed sheet metal design
- Static load: up to 2,800 kg
- Typical payload: 300 kg to 1,000 kg
- Rope distance (ASL): 400 mm to 1,100 mm, adjustable in 50 mm steps
- Traction sheave: 160 mm to 240 mm
- Deflection pulley: 160 mm to 240 mm
- Version as illustrated or motor turned through 180°
- Can be delivered assembled or unassembled

Scope of delivery

- Frame with fastening material
- Deflection pulley with fastening material
- Rope guard
- Insulating elements

Options

- Special adaptation of the frame
- Rope terminations

MK2800						
Motor type	Traction sheave D1	Deflection pulley		ASL	Max. static load	**Article no.**
		Diameter	Rim width max.			
	mm	mm	mm	mm	kg	
SM132.21/BS	160 200	160 240	106 88	400 - 1050 600 - 1100	2800	**70028312** **70028314**
SM132.35/BS	160 200					
SM190.15/23	200 240					
SM200.15C/20C/30C	160 200 240					

Dimensions mm

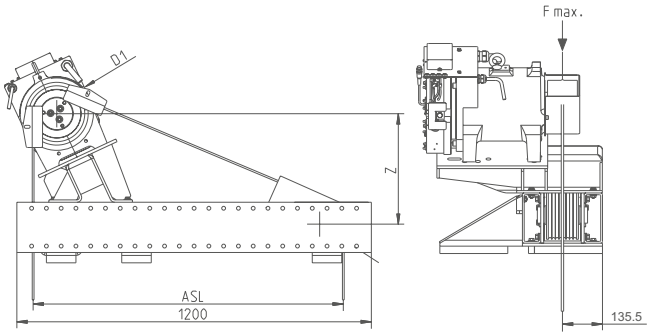

Motor type	Z
	mm
SM132.21/BS-35/BS	415
SM190	465
SM200.15C/20C/30C	465

ZAframe MN3300

Maschine frame for ZAtop SM200.15C - SM200.40D

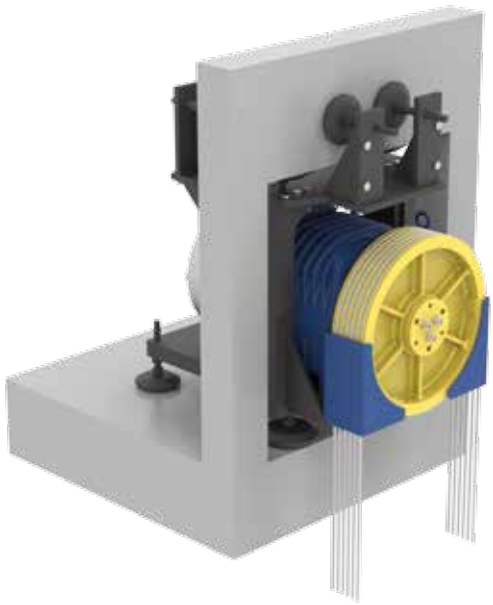

Description

- Frame for installation position traction sheave in the shaft
- Welded / screwed construction
- Static load: up to 3,300 kg
- Typical payload: 450 kg to 1,600 kg

Scope of delivery

- Frame with fastening material

Dimensions mm

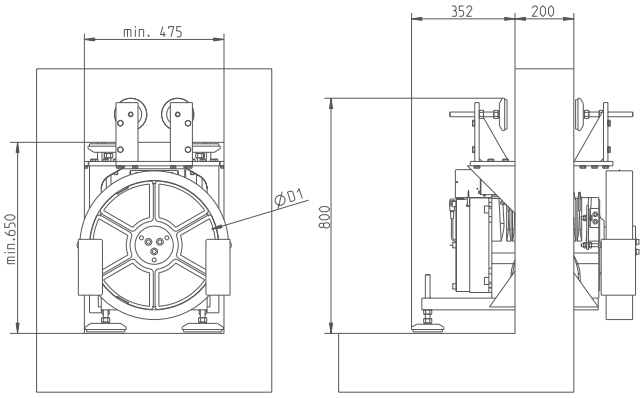

Motor type	Traction sheave D1 mm	Max. static load kg	**Article no.**
SM200.15C	320	3300	**70028146**
SM200.20C	320		
SM200.30C	320		
SM200.40D/45D	320		**70028147**
SM200.20C	400		**70028146**
SM200.30C	400		
SM200.40D/45D	400		
SM200.20C	450		
SM200.30C	450		
SM200.40D/45D	500		**70028147**

ZAframe MP350/MP500/MP3300

Mechanical adapter

Description
- Adapter for existing sub-structures
- For screwed/welded mounting

Scope of delivery
- Adapter plates or adapter rail
- Fastening material for motor

MP350 / MP500
Adapter plates for ZAtop SM160.30B - SM250.80D

Motor type	Article no.	Dimensions (W x H x D) mm	Weight kg
SM160.30B/40B	70027343	350 x 40 x 300	32
SM190.15/23	70027344		
SM200.15C/20C/30C	70027344		
SM200.40D/45D	70027345		
SM225.60B	70027376	500 x 40 x 450	65
SM250.60B			
SM250.80D			

MP3300
Adapter rail for ZAtop SM160.30B - SM200.40D longitudinal or transversal to traction sheave shaft

Motor type	Mounting	Article no.	Length mm	Weight kg
SM160.30B/40B	longitudinal	70028534	1000	38
	transversal	70027242		
SM190.15/23	longitudinal	70028535		
	transversal	70027242		
SM200.15C/20C/30C	longitudinal	70028535		
	transversal	70027242		
SM200.40D/45D	longitudinal	70028536		
	transversal	70027243		

Deflection pulleys

Scope of delivery
- Deflection pulley (plastic) with deep groove ball bearings including axle
- Two axle keep plates
- Mounting screws
- Washers
- Spacer sleeves

Options
- Two angle brackets

Deflection pulleys with axle and axle keep plates

Deflection pulley diameter	Rope diameter	Number of grooves	Groove spacing	Rim width	Axle diameter	Axle length	Weight without axle	Max. axle load
mm	mm		mm	mm	mm	mm	kg	kg
120	6 + 6.5	6	10	70	40	132	1.9	2500
160	4	7	10	80	55	170	4.5	1000
		12	10	126	55	190	5.5	1650
	8.1	4	12	54	55	170	4.0	2000
		6	12	84	55	170	4.5	2000
		8	12	108	55	170	5.0	3000
210	6 - 6.7	7	10	82	55	170	5.6	2000
		10	10	112	55	190	7.2	2500
240	6 - 6.7	7	10	82	55	170	5.6	2000
		10	10	112	55	190	7.2	2500
		12	10	134	55	190	7.2	2500
	6.5 - 6.7	14	10	156	55	230	9.2	3000
320	6.5 - 6.7	10	10	116	60	170	8.4	3000
	8	6	17	116	60	170	8.4	3000
		7	14	116	60	170	8.4	3000
		10	17	182	60	250	17.8	5000
		12	14	182	60	250	17.8	5000
400	8	6	17	116	60	170	9.8	3000
		7	14	116	60	170	9.8	3000
		10	17	182	60	250	18.4	5000
		12	14	182	60	250	18.4	5000
	10	5	17	116	60	170	9.8	3000
		7	17	138	60	210	14.2	5000
		10	17	182	60	250	18.4	5000
		10	17	182	60	250	19	6000
520	12	6	20	145	60	210	23.2	5000
	13	6	20	145	60	210	23.2	5000

Special deflection pulleys on request

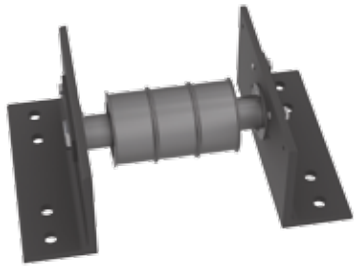

Scope of delivery
- Deflection plullyey (steel) with deep groove ball bearings including axle
- Two axle keep plates
- Mounting screws
- Washers
- Spacer sleeves

Options
- Two angle brackets

Deflection pulley with axle and axle keep plates ZAtopx

Deflection pulley diameter	Belt width max.	Number of grooves	**Article no.**	Groove width	Rim width	Axle diameter	Axle length	Weight without axle	Max. payload
mm	mm			mm	mm	mm	mm	kg	kg
100	33	2	**70029135**	58	116	40	344	4	2500
		3	**70029136**		174		344	6	
		4	**70029137**		232		414	8	
		5	**70029138**		290		414	10	

Forced ventilation ZAtop

Example of axial forced ventilation ZAtop SM250.60B

Description

For mounting on elevator machines of the ZAtop series

Example of forced cooling ZAtop SM200.30C

Forced ventilation for ZAtop				
Elevator machine	Mounting type	**Article no.**	Comment	
SM132.21, SM132.35	On top	**70030651**	With and without hand release	
SM180.24/B, SM180.35/B	On top	**70030517**	With and without hand release	
SM180.45/B, SM180.46/B	On top	**70029824**	With and without hand release	
SM200.15-30C	On top	**70027042**	With and without hand release	
SM200.40D	On top	**70027114**	With and without hand release	
SM200.45D	On top	**70027114**	With and without hand release	
SM210.60B	On top	**70029725**	With and without hand release	
SM210.70B	On top	**70029727**	With and without hand release	
SM250.45B	Side B	**70029708**	With and without hand release	
	On top	**70029067**	With and without hand release	
SM250.60B	Side B	**70028260**	Without hand release system	
	Side B	**70028262**	With hand release	
	On top	**70027021**	With and without hand release	
SM250.80D	On top	**70027846**	With and without hand release	
SM250.100C	On top	**70026864 + 02010643**	With and without hand release	Terminal box right
	On top	**70026847 + 02010643**	With and without hand release	Terminal box left

Forced ventilation for ZAtopx			
Elevator machine	Mounting type	**Article no.**	Comment
BD132.21A	On top	**70030558**	With and without hand release
BD132.35A	On top	**70030577**	With and without hand release

Oil heating motors

The solution for oil tanks in elevator and industrial hydraulics

Description

- Short-circuit proof motor for heating up hydraulic oils
- Gently heat-up oils and prevent movement and cracking through rotation
- Nearly the entire electrically absorbed energy is converted into heat
- For hydraulic oil types HL and HLP with viscosity class 22-46

FZ023-4EA.OC.V7

- Bracket with magnetic clamps
- Temperature controller
  - Closing temperature 15 °C ± 3 °C
    Opening temperature 23 °C ± 3 °C
- Terminal box

FZ025-4DA.4C.A6

- Terminal box

Options FZ025-4DA.4C.A6

- Temperature controller (article no. 02001138)
  - Closing temperature 15 °C ± 3 °C
    Opening temperature 23 °C ± 3 °C

Oil heating motors			
Type		**FZ023-4EA.OC.V7**	**FZ025-4DA.4C.A6**
Article no.		**880004751**	**104873**
Thermal output at 100 rpm	kW	0.5	1.4
Current consumption at 100 rpm	A	2.2	2.8
Connection voltage		1~ 230 V / 50 Hz	3~ 400 V AC / 50 Hz
Insulation class		F	F
Weight	kg	4.0	9.0
Blade diameter	mm	230	250

Dimensions mm

FZ023-4EA.OC.V7

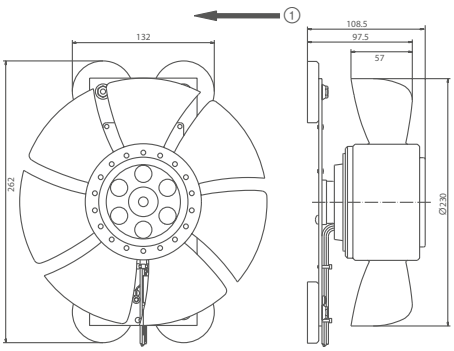

① Direction of oil flow

FZ025-4DA.4C.A6

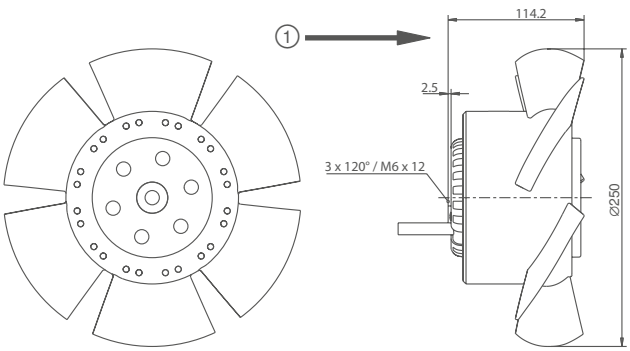

① Direction of oil flow

Tool set

Tool set for changing the brake on ZAtop SM132 - SM250C

Description

Tool set for changing the brake on elevator machines of the ZAtop series. The assembly bolts are graded in three sizes for the different brake types. Details for changing the brake are described in the operating instructions of the respective motor.

Article no. 70030741

ZAlift Calculation software

Calculation software for elevator machines from ZIEHL-ABEGG

ZAlift - the tool for selection of your elevator components. Based on the entered plant data, ZAlift calculates the matching package of machine and frequency inverter. ZAlift supports with helpful information for installation, operation and final inspection of the elevator.

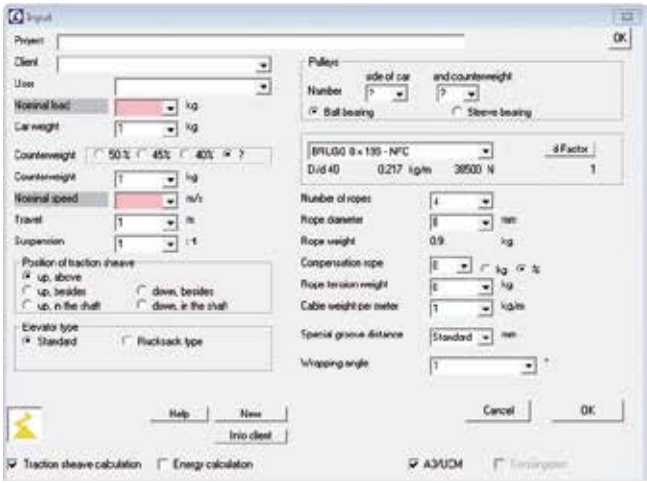

The functions

- Selection of the drive package based on the entered plant data
  - Gearless elevator machine ZAtop, ZAsyn and ZAdisc
  - Frequency inverter ZAdyn
  - Power recuperation unit ZArec4C
- Helpful informations for the final inspection
  - Traction conditions according to EN 81
  - Stopping distance according to EN 81 (unintendent car movement)
  - Energy efficiency class of the elevator according to VDI 4707
- Helpful informations for the installation
  - Calculation of the power and current consumption of the elevator machine
- Extensive database of available suspension means
- Backup of the calculation (incl. data)

ZAlift is available as a free of charge download on the ZIEHL-ABEGG homepage.

ZIEHL-ABEGG
ZA dyn pro
X-SBY
X-STO
X-ENCO
X-ENC1S
X-CAN
ZA pad
ZAdynPro
Startup
Statistik
Memory Card
ZIEHL-ABEGG

Control technology

Product overview

Information	Page 78
ZAdyn4C	Page 82
ZAdynpro	Page 84
ZAdyn4B	Page 86
ZAdyn4CA HY	Page 88
EVAC 3C	Page 90
ZArec4C	Page 92

Control technology

General information

Operators, residents and passengers have high demands when it comes to a cutting-edge elevator system. In addition to travelling comfort, the noise emissions play an especially significant role in the evaluation of the elevator. The contactorless frequency inverters from the ZAdyn4C and ZAdynpro series enable very low-noise operation of the elevator machine. In this way, they make a major contribution to the realisation of a modern elevator.

STO (Safe Torque Off) - contactor-less operation according to EN 81-20

The contactor-less operation of the elevator machine according to operating mode STO (Safe Torque Off according to IEC 61800-5-2 (SIL 3)) or EN ISO 13849 Category 3, Performance Level e meets the requirements of EN 81-20 to the separation of the power supply of the drive.

Electronic short-circuit

The short-circuiting of the motor windings of synchronous motors avoids in many cases uncontrolled acceleration of the drive and therefore ensures controllable evacuation of persons by manual opening of the motor brakes. The ZAdyn4C also has this function which was so well appreciated in its predecessors. It was implemented with consistent pursuance of the principle of the contactor-less frequency inverter and an electronic variant was developed. This is also active when no operating voltage exists!

ZAsbc4 - 100 % noiseless

The contactor-less operation of the elevator machine already makes a major contribution towards a low-noise elevator system.
The ZAsbc4 increases this to 100 %! Electronic switching of the brakes enables completely contactor-less operation of the elevator machine. This ensures minimum noise emissions and maximum comfort in the building.

Contactor-less operation - your benefit

- No switching noises
- Lower costs
- Lower power consumption
- Lower wiring costs
- No wearing components
- Reduced space requirements for the controller
- Safe operation

Specialists for elevator technology

Units for the ZAdyn series are frequency inverters solely developed for elevator technology. The various housing designs and the continuously compact construction makes them perfectly suitable for both switch cabinet mounting as well as for wall installation in the machine room or elevator shaft.

Both in rope elevators with synchronous or asynchronous motors as well as in hydraulic elevators, type ZAdyn frequency inverter provide the greatest travelling comfort and the most precise stopping accuracy.

The software, specifically matched to elevator technology, facilitates intuitive operation and fast commissioning. The high variety of various interfaces facilitate fast connection to the elevator controller.

Made by ZIEHL-ABEGG

A high degree of vertical integration means great flexibility. And an ultra-modern machine fleet is available to ensure that. From component placing in the boards up to the final test and inspection of the frequency inverter and their accessories, the entire ZAdyn series is produced in our headquarters in Künzelsau. That enables us to meet our partners' demands for flexibility and speed.

EMC-conform without any great effort

All standards which are obligatory for elevator systems are complied with through the line reactor and the radio interference filter integrated in the ZAdyn4C.

EN 12015: Electromagnetic compatibility - Product family standard for lifts, escalators and moving walks - Emission
EN 12016: Electromagnetic compatibility - Product family standard for lifts, escalators and moving walks - Immunity

With the integration of the EMC components, the ZAdyn4 provides the user with even more advantages:

- No mounting and wiring effort
- Use of components specifically matched to the ZAdyn4
- No risk regarding the compliance with EMC standards
- No additional space requirement

Control technology

General information

Better energy efficiency of your system!

In typical elevator systems, the unused energy generated during travel is converted by a brake resistor into waste heat. From an environmental perspective, this approach is put into question by increasing resource scarcity, rising energy costs and the resulting increasing demands for energy efficiency and sustainability, which require ways of using the unexploited energy potential. These requirements are met by using the ZArec power recuperation unit. The generated energy is preprocessed and fed back into the power supply. ZArec has been developed especially for brief, highly dynamic recuperation operation, such as that which occurs in elevator systems.

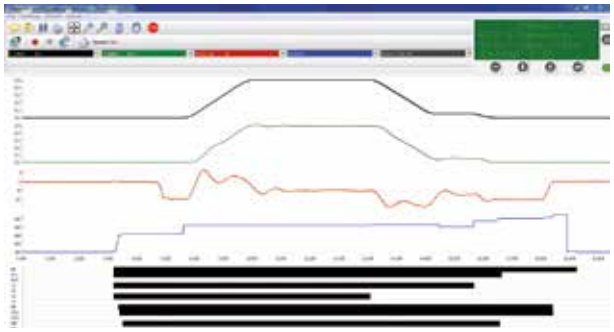

Data backup and recording measuring curves - fast and simple!

Alle Devices of the ZAdyn, ZArec and EVAC 3 series as well as the ZApad operating terminal are equipped with an interface for a conventional memory card. The use of a memory card provides many functions which simplify the work.

Data backup:
- Data backup for professional documentation without special software
- Copying of parameters for identical elevator systems

Recording measuring curves:
- 4 analogue and 1 digital measuring channel – freely configurable
- Saving of normal and faulty travels
- Extended error analysis in servicing by measured value storage
- Analysis of sporadic errors
- Long-term documentation of travel processes

More competence.
More experience.
More commitment.

In addition to excellent, easy to use products, personal customer support and fast, on-time delivery, customer-orientated service is also one of our special strengths. Competent support by specialised, experienced service staff are prerequisite for saving time and costs on site. With our comprehensive service package we therefore make an essential contribution to fast start-up of your elevator system.

- Technical design of drive systems
- Application-engineering consulting when selecting frequency inverters, elevator machines, evacuation units, recuperation units and their system components
- Preset of all parameters of the ZAdyn before delivery when ordering drive packages (machine with frequency inverter) from ZIEHL-ABEGG
- Service hotline for start-up or technical questions
- Technical service and training on-site

Smart and mobile

The app ZAmon is the perfect tool for operating ZAdyn frequency inverter and ZArec4C recuperation units with mobile devices such as smartphones or tablets. .
Clearly structured user interfaces with self-explanatory icons, informative texts for each parameter and the online support are perfect preconditions for fast and independent work.

For iOS and Android

- Parameterization on- and offline
- Commissioning wizard
- Analysis by recording travel curves
- Direct e-mail contact to ZIEHL-ABEGG customer service

ZAdyn Frequency inverter for elevator machines

4C - The solution for wall installation

Operating terminal ZApad	Page 96
Bluetooth® wireless technology ZAmon STICK	Page 96
Brake resistors BR	Page 97
Brake control ZAsbc4	Page 98
Control and connection cables	Page 106
Encoder cables	Page 116
Evacuation unit EVAC 3C	Page 90
Power recuperation unit ZArec4C	Page 92

Contactor-less operation:

- STO (Safe Torque Off) according to IEC 61800-5-2 (SIL 3) or EN ISO 13849 category 3, Performance Level e with protection class IP20.
- Requirements of EN 81-20 to the disconnection of the power supply of the drive are met!

Description

- Wall mounting in the machine room or elevator shaft
- Mounting in the control cabinet
- Line reactor, radio interference filter integrated
- Space-saving installation by compact design
- Operation of synchronous motors (ZAdyn4CS) and asynchronous motors (ZAdyn4CA)
- Open-Loop-Operation of asynchronous motors
- Standby function
- 4-line display with plain text display
- Minimal noise generation and low energy consumption through controlled ventilation
- Automatic operating-curves default
- Switching frequency: 4...16 kHz (automatic adaptation)
- Applied EMC standards: EN 12015 and EN 12016
- Protection class: IP20

Interfaces

Controller
- Programmable inputs and outputs
  - 5 x relay output (potential-free)
  - 12 x digital input (24 VDC)
- DCP
- CANopen-Lift
- All interfaces galvanic isolated

Encoder
- Incremental
  - HTL / TTL / Sine
- Absolute
  - EnDat / SSI / SinCos / Hiperface / BiSS-C
- Simulation for controller

Monitorings
- Temperature monitoring brake resistor
- Temperature monitoring motor (in accordance with EN 61800-5-1:2008-04)
- Motor contactor monitoring (with optional use of motor contactors)
- Brake release monitoring in accordance with EN 81-20

Technical data

Type	Article no.	Phases	Nominal voltage	Mains frequency	Motor power typ.	Nominal current	Current max.	Duty cycle	Weight
			VAC	Hz	kW	A	A	%	kg
ZAdyn4CA 011	352194	3~	400	50/60	4.6	11	20	60	11.80
ZAdyn4CS 011	352201								12.00
ZAdyn4CA 013	352195				5.5	13	24		12.60
ZAdyn4CS 013	352202								12.80
ZAdyn4CA 017	352196				7.5	17	31		13.00
ZAdyn4CS 017	352203								13.20
ZAdyn4CA 023	352197				11	23	42		14.10
ZAdyn4CS 023	352204								14.30
ZAdyn4CA 032	352198				14	32	58		16.40
ZAdyn4CS 032	352205								16.60
ZAdyn4CA 040	352206				19	40	72		32.40
ZAdyn4CS 040	352216								32.60
ZAdyn4CA 050	352207				24	50	90		33.30
ZAdyn4CS 050	352217								33.50
ZAdyn4CA 062	352208				30	62	112		36.20
ZAdyn4CS 062	352218								36.40
ZAdyn4CA 074	352209				37	74	134		36.40
ZAdyn4CS 074	352219								36.60

Features
- MMC / SD card interface for data backup and exchange
- USB interface for ZAmon software (via ZApad)

Options
- External ZApad operating terminal; 4-line display with plain text display
- Electronic brake control ZAsbc4
- ZAmon (app or version for pc)
- Bluetooth® wireless technology ZAmon STICK

Evacuation mode
Supply during power failure through:
- EVAC 3C evacuation unit
- Uninterruptible power supply (UPS)

Electromagnetic compatibility
Compliance with EN 12015 and EN 12016 through integration of line reactor and radio interference filter in the ZAdyn4C.

Frequency inverter	Brake resistor	Article no.
ZAdyn4C 011	BR11-A BR14-A BR17	357171 357195 357216
ZAdyn4C 013	BR14-A BR17	357195 357216
ZAdyn4C 017	BR17	357216
ZAdyn4C 023	BR25	357217
ZAdyn4C 032	BR25 BR50	357217 357218
ZAdyn4C 040	BR50	357218
ZAdyn4C 050	BR50	357218
ZAdyn4C 062	BR50	357218
ZAdyn4C 074	BR50 BR100-A	357218 357214

Dimensions mm

ZAdyn4C 011-032

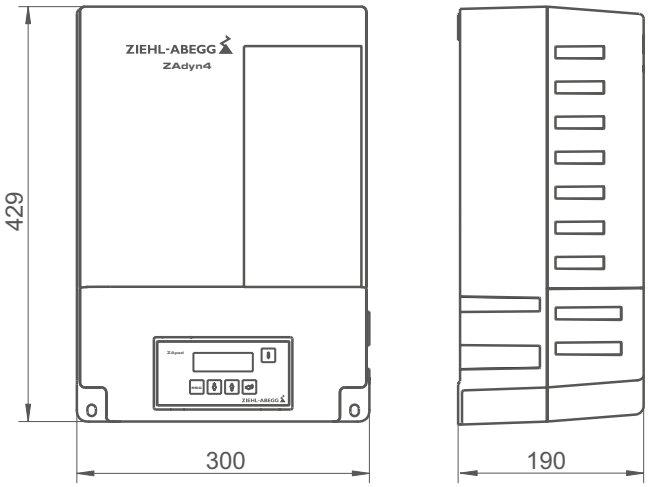

ZAdyn4C 040-074

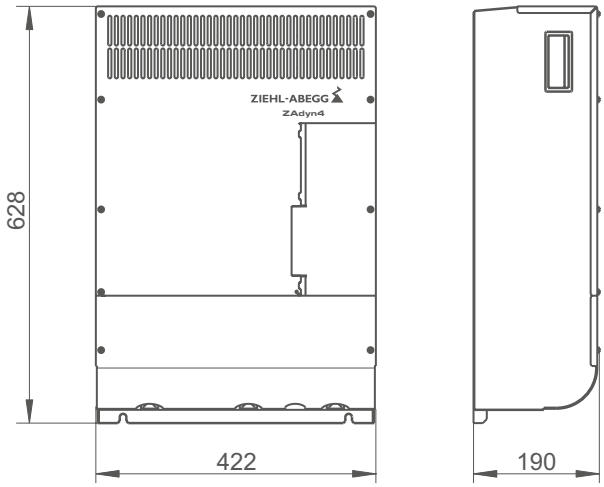

ZAdyn Frequency inverter for elevator machines

Pro - the solution for control cabinet mounting

Description

- Mounting in the control cabinet
- Radio interference filter integrated
- Space-saving installation by compact design
- Operation of synchronous motors and asynchronous motors
- Open-Loop-Operation of asynchronous motors
- Standby function
- 4-line display with plain text display
- Minimal noise generation and low energy consumption through controlled ventilation
- Automatic operating-curves default
- Switching frequency: 4...16 kHz (automatic adaptation)
- Applied EMC standards: EN 12015 und EN 12016
- Protection class: IP20

Interfaces

Controller
- Inputs (24 VDC)
  - 8 x digital input, freely programmable
  - 3 x digital input monitoring of motor brakes
  - 1 x digital input monitoring of braking resistor
- Outputs
  - 3 x relay output (potential-free)
  - 2 x mini relay output (potential-free)
- CANopen-Lift
- All interfaces galvanic isolated

Encoder
- Incremental
  - TTL / Sine
- Absolute
  - EnDat / SSI / SinCos / BiSS-C
- Simulation for controller

Monitorings
- Temperature monitoring brake resistor
- Brake release monitoring in accordance with EN 81-20

Operating terminal ZApadpro	Page 96
Bluetooth® wireless technology ZAmon STICK	Page 96
Brake resistors BR	Page 100
Brake control ZAsbc4	Page 98
Control and connection cables	Page 109
Encoder cables	Page 116
Evacuation unit EVAC 3C	Page 90
Power recuperation unit ZArec4C	Page 92

Contactor-less operation:

- STO (Safe Torque Off) according to IEC 61800-5-2 (SIL 3) or EN ISO 13849 category 3, Performance Level e with protection class IP20.
- Requirements of EN 81-20 to the disconnection of the power supply of the drive are met!

Technical data

Type	Article no.	Phases	Nominal voltage	Mains frequency	Motor power typ.	Nominal current	Current max.	Duty cycle	Weight
			VAC	Hz	W	A	A	%	kg
ZAdynpro 011	352250	3~	400	50/60	4.6	11	20	40	4.70
ZAdynpro 013	352251				5.5	13	24		4.70
ZAdynpro 017	352252				7.5	17	31		4.80
ZAdynpro 023	352253				11	23	42		6.00
ZAdynpro 032	352254				14	32	58		6.30
ZAdynpro 040	352255				19	40	72		16.10
ZAdynpro 050	352256				24	50	90		16.40
ZAdynpro 062	352257				30	62	112		17.10
ZAdynpro 074	352258				37	74	134		17.10

Features
- MMC / SD card interface for data backup and exchange
- USB interface for ZAmon software (via ZApadpro)

Options
- External ZApadpro operating terminal; 4-line display with plain text display
- Electronic brake control ZAsbc4
- ZAmon (App or version for pc)
- Bluetooth® wireless technology ZAmon STICK

Evacuation mode
Supply during power failure through:
- EVAC 3C evacuation unit
- Uninterruptible power supply (UPS)

Electromagnetic compatibility
Compliance with EN 12015 and EN 12016 through integration of a line reactor Typ ND... in the mains supply.

Frequency inverter	Brake resistor	Article no.
ZAdynpro 011	BR11-A BR14-A BR17	357171 357195 357216
ZAdynpro 013	BR14-A BR17	357195 357216
ZAdynpro 017	BR17	357216
ZAdynpro 023	BR25	357217
ZAdynpro 032	BR25 BR50	357217 357218
ZAdynpro 040	BR50	357218
ZAdynpro 050	BR50	357218
ZAdynpro 062	BR50	357218
ZAdynpro 074	BR50 BR100-A	357218 357214

Dimensions mm

ZAdynpro 011-017

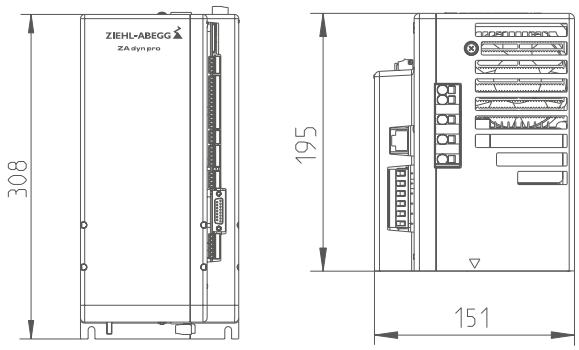

ZAdynpro 023-032

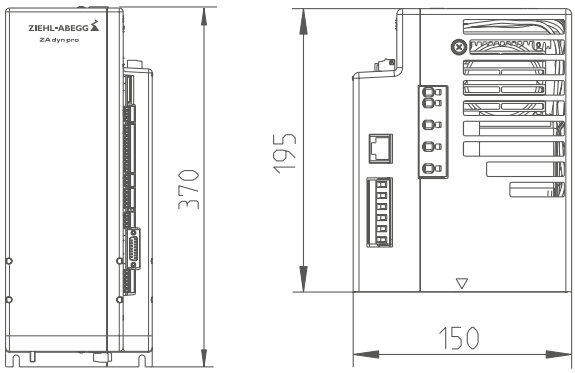

ZAdynpro 040-074

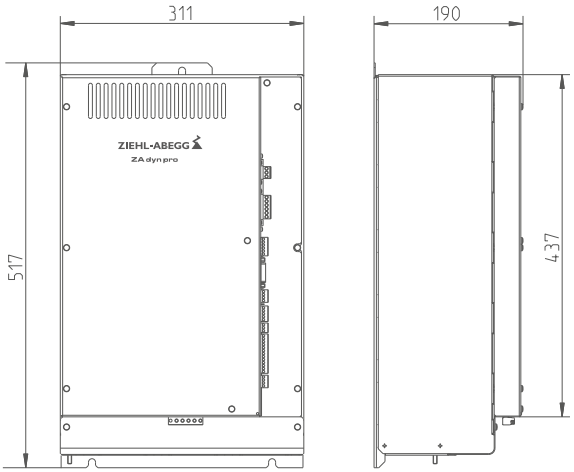

ZAdyn Frequency inverter for elevator machines

4B -The solution for high performances

Description

- Mounting in the control cabinet
- Space-saving installation through compact design
- Operation of synchronous motors (ZAdyn4BS) and asynchronous motors (ZAdyn4BA)
- Open-Loop-Operation of asynchronous motors
- Standby function
- 4-line display with plain text display
- Minimal noise development and low energy consumption by controlled ventilation
- Automatic operating-curves default
- Switching frequency: 4...16 kHz (automatic adaptation)
- Applied standards: EN 12015 and EN 12016
- Protection class: IP10

Interfaces

Control
- Programmable inputs and outputs
  - 5 x relay output (potential-free)
  - 12 x digital input (24 VDC)
- DCP
- CANopen-Lift
- All interfaces electrically isolated

Encoder
- Incremental
  - HTL / TTL / sine
- Absolute
  - EnDat / SSI / SinCos / Hiperface / BiSS-C
- Encoder simulation for controller

Monitoring
- Temperature monitoring brake resistor
- Temperature monitoring motor (according to IEC 61800-5-1:2008-04)
- Motor contactor monitoring
- Brake release monitoring according to EN 81-20

Operating terminal ZApad	Page 96
Bluetooth® wireless technology ZAmon STICK	Page 96
Brake resistors BR	Page 97
Brake control ZAsbc4	Page 98
Control and connection cables	Page 105
Encoder cables	Page 116
Power recuperation unit ZArec4C	Page 92

Technical data

Type	Article no.	Phases	Nominal voltage VAC	Mains frequency Hz	Motor power typ. kW	Nominal current A	Current max. A	Duty cycle %	Weight kg
ZAdyn4BA 110	352210	3~	400	50/60	55	110	198	60	57.00
ZAdyn4BS 110	352212								
ZAdyn4BA 180	352211				90	180			63.00
ZAdyn4BS 180	352213								

Features
- MMC / SD card interface for data backup and exchange
- USB interface for ZAmon software (by ZApad)

Options
- External operating terminal ZApad; 4-line display with plain text display
- Electronic brake control ZAsbc4
- ZAmon (app or version for pc)
- Bluetooth® wireless technology ZAmon STICK

Electromagnetic compatibility
Compliance with EN 12015 by use of:
- Line reactor ND
- Radio interference filter FEF

Frequency inverter	**Brake resistor**	**Article no.**
4B 110	**BR100-B**	**357215**
4B 180	**BR100-B**	**357215**

Dimensions mm

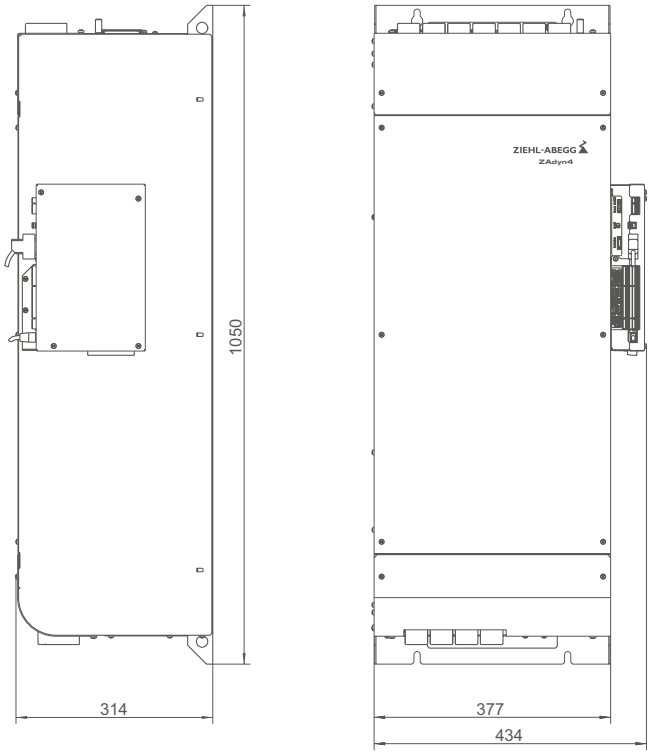

ZAdyn Frequency inverter for elevator machines

4CA HY - the solution for modernization of hydraulic elevators

Description

Changeover to frequency-regulated operation
- No need to intervene in the hydraulic system
- The asynchronous motor of the hydraulic pump is operated using a specially developed pseudo closed-loop procedure with DCP04

Compatible valve blocks

- Bucher Hydraulics GmbH: lift control valve LRV-1
- Blain Hydraulics GmbH: control valve type EV 100
- GMV Oildynamic: control block 3010
- ALGI Alfred Giehl GmbH & Co. KG: control block type AZSTB
- Further types on request

Interfaces

Control system
- Programmable inputs and outputs
  - 5 x relay output (floating)
  - 12 x digital input (24 VDC)
- DCP
- CANopen-Lift
- All interfaces are electrically isolated

Operating terminal ZApad	Page 96
Bluetooth® wireless technology ZAmon STICK	Page 96
Control and connection cables	Paeg 108

Contactor-less operation:

- STO (Safe Torque Off) according to IEC 61800-5-2 (SIL 3) or EN ISO 13849 category 3, Performance Level e with protection class IP20.
- Requirements of EN 81-20 to the disconnection of the power supply of the drive are met!

Technical data

Type	Article no.	Phases	Nominal voltage	Mains frequency	Motor power typ.	Nominal current	Current max.	Duty cycle	Weight
			VAC	Hz	kW	A	A	%	kg
ZAdyn4CA 018 HY	352240	3~	400	50/60	7.5	18	23	60	12.60
ZAdyn4CA 025 HY	352241				11	25	31		13.00
ZAdyn4CA 032 HY	352242				14	32	40		14.10
ZAdyn4CA 040 HY	352243				19	40	50		16.40
ZAdyn4CA 050 HY	352244				22	50	63		32.40
ZAdyn4CA 063 HY	352245				30	63	79		33.30
ZAdyn4CA 080 HY	352246				37	80	100		36.20
ZAdyn4CA 105 HY	352247				50	105	131		36.40

Features
- MMC / SD card interface for data backup and exchange
- USB interface for ZAmon software (via ZApad)

Options
- External ZApad operating terminal; 4-line display with plain text display
- ZAmon (app or version for pc)
- Bluetooth® wireless technology ZAmon STICK

Evacuation mode
Supply during power failure through:
- EVAC 3C evacuation unit
- Uninterruptible power supply (UPS)

Electromagnetic compatibility
Compliance with EN 12015 and EN 12016 through integration of line reactor and radio interference filter in the ZAdyn4C.

Dimensions mm

ZAdyn4C 018-040 HY

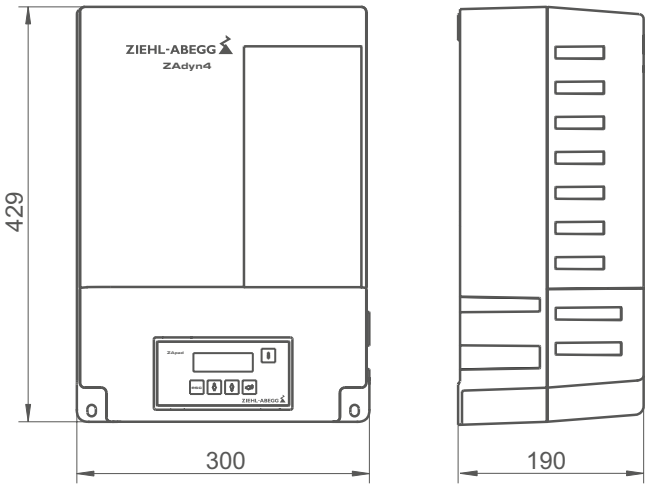

ZAdyn4C 050-105 HY

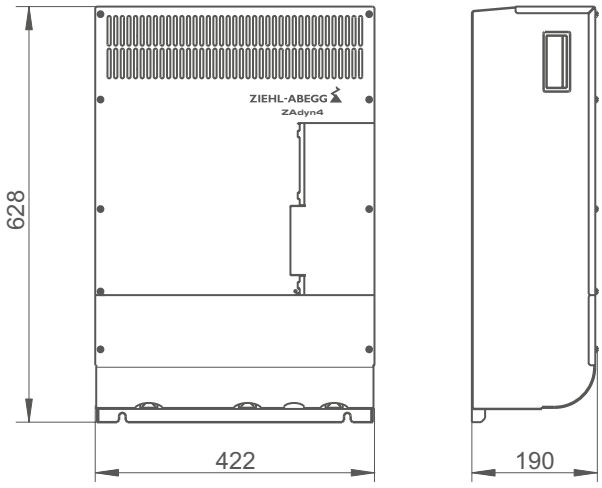

Evacuation unit

EVAC 3C - The solution for wall installation

Monitoring of the power supply and activation of the evacuation travel

The evacuation unit EVAC 3C monitors the mains power supply of the elevator system. If one or more supply phases fail, the frequency inverter is disconnected from the supply network. The elevator control system and frequency inverter are simultaneously informed of the power failure. The battery power supply is then connected with a time delay. The frequency inverter switches to emergency mode (reduced speed) and an evacuation can be started via the elevator control system regardless of the current load ratios.

The alternative to a complex and drawn-out process of having trapped individuals freed by third-party personnel.

Operating terminal ZApad	Page 96
Frequency inverter ZAdyn4C	Page 82
Frequency inverter ZAdynpro	Page 84
EVAC Battery set and wiring harness	Page 111

Description

- Wall installation in machine room or elevator shaft
- For synchronous and asynchronous motors
- For frequency inverters ZAdyn
- 60 min availability (with restricted number of trips)
- Integrated mains monitoring
- Integrated charger for controlled charging of lead-gel rechargeable battery
- Operation and configuration via the ZApad operating terminal
- Monitoring of the battery temperature
- Function test via digital input
- LED display for operation / fault
- 4 x relay output
- 4 x digital input (24 VDC)
- External main switch; that permits installation in the elevator shaft
- Prefabricated cables for fast installation
- Power contactors for switching from normal to battery mode
- Integrated inverted rectifier 230 VAC / 500 W to supply:
  - Elevator controller
  - Cabin light
  - Door drive
  - Motor brake
- SD card slot for data backup

Technical data

Type	Article no.	Phases	Nominal voltage VAC	Mains frequency Hz	Nominal current A	Battery voltage	Battery type	Time limit evac. min	Weight kg
EVAC 3C032	**357231**	3~	400	50/60	32	120...180	Lead gel batteries	60	33.20
EVAC 3C050	**357232**				50				34.70
EVAC 3C074	**357233**				74				38.40

Features
- External operating terminal ZApad
- MMC/SD card interface for data backup and exchange

Options
- Wiring harness LS-EVAC3C-03-HX-...-ZA3/4
- Wiring harness LS-EVAC3C-..-HX-ST

Additionally required components
- Battery set corresponding to the required output
- 4-pole main switch

Simplified diagram

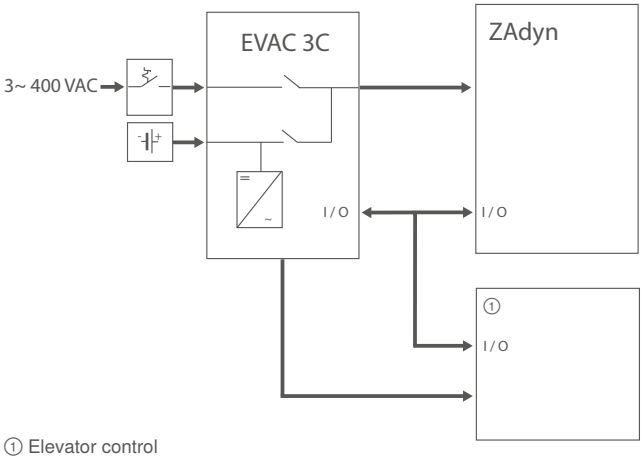

① Elevator control

Dimensions mm

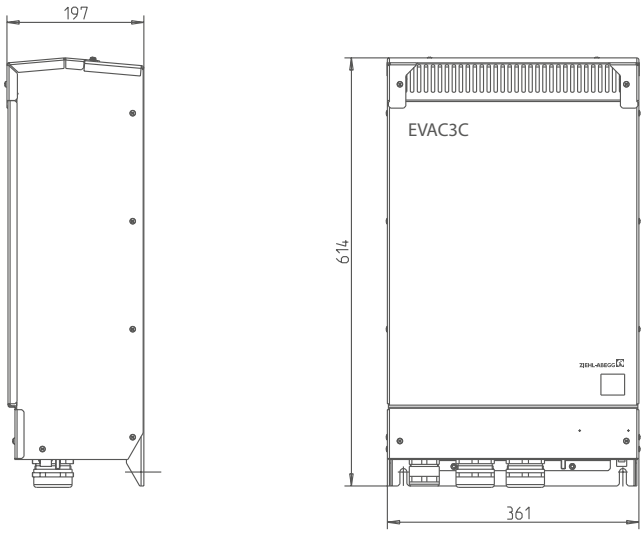

Power recuperation units

ZArec4C - The solution for improving energy efficiency and sustainability

With the ZArec power recuperation unit the demands for energy efficiency and sustainability of elevator systems are met. The generated energy is preprocessed and fed back into the power supply. ZArec has been developed especially for brief, highly dynamic recuperation operation, such as that occurs in elevator systems.

Operating terminal ZApad	Page 96
Bluetooth® wireless technology ZAmon STICK	Page 96
Frequency inverter ZAdyn4C	Page 82
Frequency inverter ZAdynpro	Page 84
Wiring harnesses	Page 111
Brake resistors BR	Page 97

Description

- Extremely flat design
- Perfect for the elevator shaft
  - ZArec4C 013: Mounting above the landing door
  - ZArec4C 026 / 039: Mounting between the guiding rails
- Wall mounting in the machine room or elevator shaft
- Can be used for ZAdyn frequency inverters
- Integrated standby function for saving energy
- Prefabricated cables for fast assembly
- Applied standards: EN 12015 and EN 12016
- Protection class: IP20
- Max. on-time: 20%

Interfaces

- 2x relay output
- 2x digital input

Regeneration “Clean energy”

- Sinusoidal regenerative power through integrated EMC components
- Harmonic waves I1/I5: < 5 %
- Distortion factor THD: < 5 %
- Requirements of EN 12015 for the electromagnetic compatibility are met
- No interference with network infrastructure
- No interference with the function of other devices connected to the mains power supply, e.g. computers, medical devices or radios

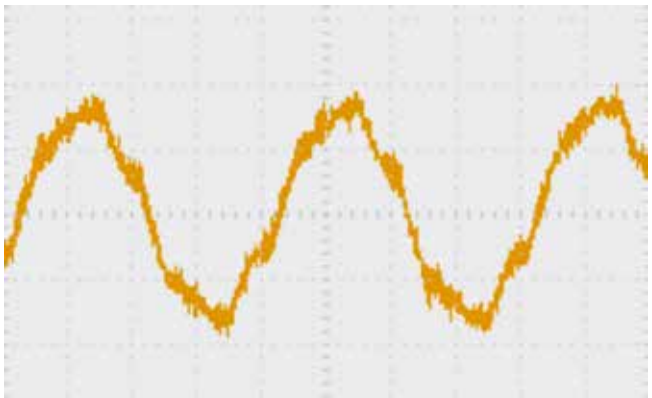

Sinusoidal power feed-in

Technical data

Type	Article no.	Phases	Nominal voltage	Mains frequency	Recuperation power	Max. recuperation current	Power loss standby	Weight
			VAC	Hz	kW	A	W	kg
ZArec4C 013	**357269**	3~	400	50	5	7	< 10	42.50
ZArec4C 026	**357294**				10	14.4	13	61.00
ZArec4C 039	**357295**				15	21.7		78.00

No additional brake resistor for evaluations

During evacuation travel, the brake resistor belonging to the ZArec converts the created energy into heat. Additional costs for an additional brake resistor are saved.

Brake resistor allocation

Type	Brake resistor	Article no.
ZArec4C 013	**integrated**	**-**
ZArec4C 026	**BR25-3**	**357217**
ZArec4C 039	**BR50-3**	**357218**

Dimensions mm

ZArec4C 013

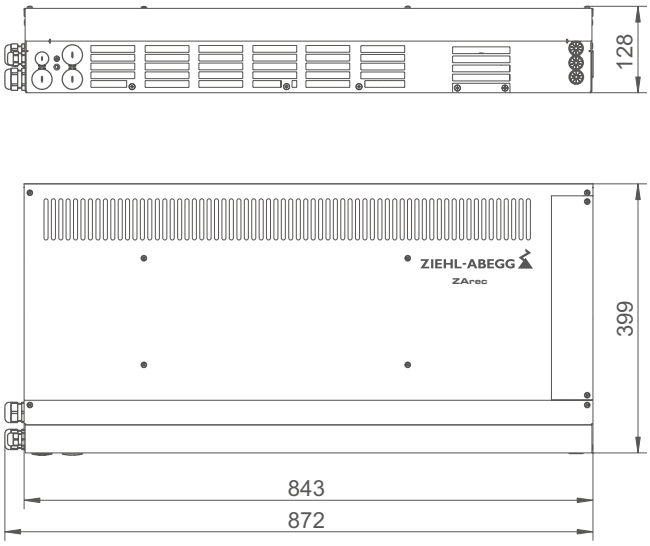

ZArec4C 026-039

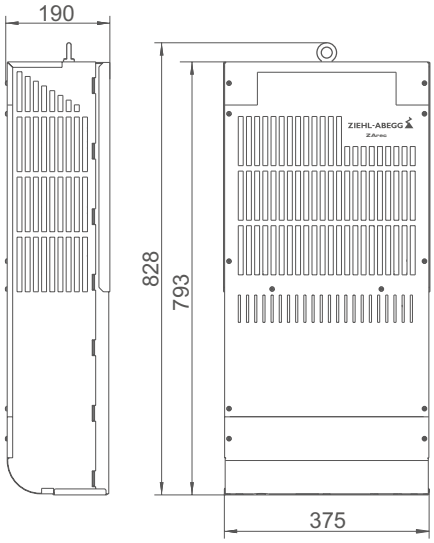

ZAdynPro
Startup
Statistik
Memory Card
ZApad
ZIEHL-ABEGG
esc

System components control technology

Product overview

ZApad / BR100-BOX	Page 96
Brake resistor BR	Page 97
Electronic brake control ZAsbc4	Page 98
Line reactor	Page 100
Radio interference filter	Page 101
Retrofit kit	Page 102
Control and connection cables ZAdyn4	Page 105
Connection cables ZAdynpro	Page 109
Control and connection cables ZAsbc4	Page 109
Connection cables ZApad	Page 110
EVAC Battery set and wiring harness	Page 111
Motor cables	Page 112
Encoder cables	Page 116
Encoder incremental	Page 119
Absolute encoder / adapter cables	Page 121
ZAmon	Page 122

ZApad

Operating terminal ZApad

Operating terminals can be used across products.

Description
- External operating terminal
- 4-line display with plain text display

ZApad for:
- ZAdyn4C
- ZAdynpro 040-074
- ZArec4C
- EVAC 3C

Artikel Nr. 357256

ZApadpro for:
- ZAdynpro 011-032

Artikel Nr. 357300

ZAmon STICK

Bluetooth® wireless technology for operation by mobile device in combination with the app ZAmon

Description
- For ZAdyn and ZArec4C
- Bluetooth Low Energy
- Connection by network cable
- Optimal wireless connection due to different possibilities for installation in the machine room or elevator shaft

Article-No. 357316

The Bluetooth® word mark and logos are registered trademarks owned by Bluetooth SIG, Inc. and any use of such marks by ZIEHL-ABEGG SE is under license. Other trademarks and trade names are those of their respective owners

BR100-BOX

For connection of two or three BR100-3B type brake resistors to ZAdyn4B 110/180.

Description
- Connection box with integrated terminals
- For parallel connection of up to three BR100-3B type brake resistors

BR100-BOX
Article no. 357261

Brake resistor BR

BR17 - BR100

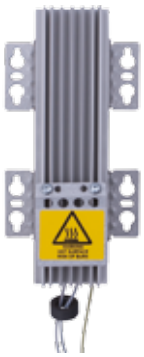

BR09 - BR14

For converting the energy generated during regenerative travel into heat.

Description

- Prepared for wall installation
- Compact design
- Integrated temperature monitoring (only BR...-3)
- Integrated connection cable (only BR...-A)

Technical data

Type	Article no.	Max. peak current	Continuous braking power	Temperature monitor trigger	Cable length	Protection class	Weight
		A	kW	°C	m		kg
BR09-1	**357120**	9.0	0.29	-	1.0*	IP50	0.8
BR11-A	**357171**	11.0	0.45	-	1.0*	IP50	1.8
BR14-A	**357195**	14.0	0.85	-	1.0*	IP50	2.9
BR17-3	**357216**	17.0	1.75	137 ± 4 K	5.0**	IP20	2.6
BR25-3	**357217**	25.0	1.75	137 ± 4 K	5.0**	IP20	2.6
BR50-3	**357218**	50.0	3.3	137 ± 4 K	5.0**	IP20	4.8
BR100-3A	**357214**	100.0	6.5	125 ± 4 K	5.0**	IP20	8.5
BR100-3B	**357215**	100.0	6.5	125 ± 4 K	5.0**	IP20	8.5

* Connection cable integrated
** Connection cable separate

Dimensions mm

BR09 - BR14

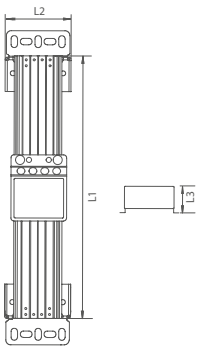

Type	L1	L2	L3
BR09-1	317	67	75
BR011-A	225	124	120
BR014-A	426	124	120

BR17 - BR100

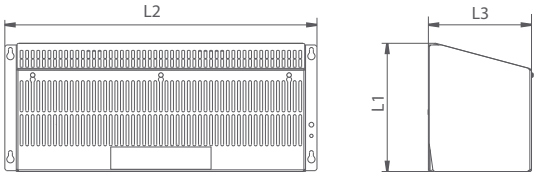

BR017-3	230	300	185
BR025-3	230	300	185
BR050-3	230	560	185
BR100-3A	414	560	185
BR100-3B	414	560	185

Electronic brake control

ZAsbc4

ZAsbc4C

Following conditions are necessary for comfortable travel behaviour of the elevator:
- Correctly timed switching of the brake
- Noiseless activation of the brake
- Low-noise switching of the brake

The electronic brake control ZAsbc4 meets these requirements.
The ZAsbc4 is available for mounting on to the ZAdyn4C frequency inverter and for installation in the switch cabinet.

Description

- Noiseless activation of the mechanical brake
- Correctly timed switching of the mechanical brake
- For brakes of synchronous and asynchronous motors
- Low-noise switching of the mechanical brake
- Minimum cable lengths for elevators without machine room
- Low space requirement for the controller

ZAsbc4B

Electronic brake control

- For brakes with and without overexcitation
- Operating voltage brake: 207 VDC / 103 VDC
- Evaluation of safety chain and enabling of contactor-less operation
- Retrofittable
- Prefabricated cables for connection to elevator controller

- Control inputs:
  - Activation of brake
  - Evaluation of safety chain
  - Push-buttons emergency operation and brake test

- Control outputs:
  - Activation of contactor-less operation ZAdyn
  - Status monitoring
  - Fault

Safety component according to the Lift Directive 2014/33/EU. The requirements relating to the disconnection of the energy supply to the brakes as stated in
EN 81-20 are met!

Control and connection cables Page 109

Technical data

ZAsbc4C

- For mounting on ZAdyn4C
- Prefabricated cables for connection to ZAdyn4C

Type	Article no.	Voltage safety chain VAC	Voltage supply brake U~ VAC	Motor brake output voltage VDC	Output current A
ZAsbc4C 110	357292	110	230	0.9 x U~ 0.45 x U~	2 x 1.1
ZAsbc4C 230	357293	230			

ZAsbc4B

- For control cabinet installation

Type	Article no.	Voltage safety chain VAC	Voltage supply brake U~ VAC	Motor brake output voltage VDC	Output current A
ZAsbc4B 110	357290	110	230	0.9 x U~ 0.45 x U~	2 x 1.1
ZAsbc4B 230	357291	230			

Line reactor ND

Description

- For ZAdynpro and ZAdyn4B
- For compliance with the limits required by EN 12015 (interference emission)
- Reduction of the harmonics
- Damping of commutation notches and mains feedback

Technical data

Type	Article no.	Nominal current A	Protection class	Weight kg	Frequency inverter
ND011	**357180**	11	IP00	2.40	ZAdynpro 011
ND013	**357181**	13		2.50	ZAdynpro 013
ND017	**357182**	17		3.30	ZAdynpro 017
ND023	**357183**	23		4.00	ZAdynpro 023
ND032	**357184**	32		6.70	ZAdynpro 032
ND040	**357185**	40		7.70	ZAdynpro 040
ND050	**357186**	50		8.70	ZAdynpro 050
ND062	**357187**	62		12.10	ZAdynpro 062
ND074	**357188**	74		12.30	ZAdynpro 074
ND110	**357196**	110		14.00	ZAdyn4B 110
ND180	**357197**	180		21.00	ZAdyn4B 180

Dimensions mm

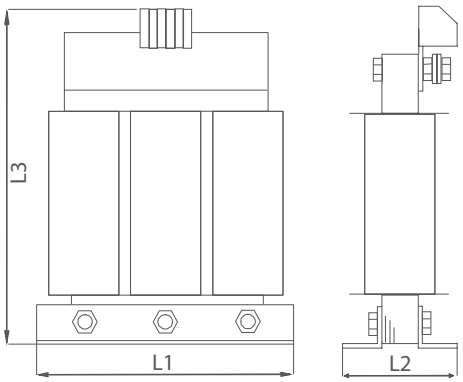

Type	L1	L2	L3
ND011	125	61	135
ND013	125	71	135
ND017	125	71	135
ND023	155	80	160
ND032	155	95	170
ND040	190	85	200
ND050	190	120	200
ND062	190	120	200
ND074	190	120	200
ND110	230	150	280
ND180	230	150	305

Radio interference filter FEF

Description

- For ZAdyn4B
- For compliance with the limits required by EN 12015 (interference emission)
- Reduces high-frequency electromagnetic emission

Technical data

Type	Article no.	Nominal current A	Protection class	Weight kg	Frequency inverter
FEF180KK4D	**357199**	180	IP20	6.00	ZAdyn4B 110 ZAdyn4B 180

Dimensions mm

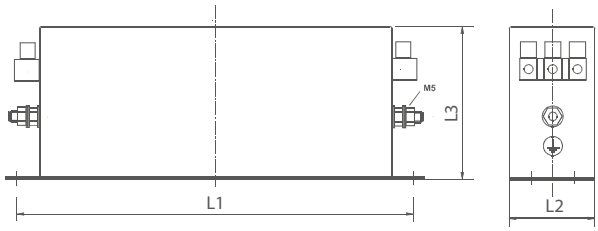

Type	L1	L2	L3
FEF180KK4D	450	130	180

Retrofit kits

Retrofit kit DISCcontrol

Description
- Retrofit kit for operation of permanently excited disc motors with ZAdyn4CS
- Quick frequency inverter replacement in combination with a commonly available elevator controller
- Simple attachment of the incremental encoder and hall sensor
- Fail-safe connection of incremental encoder and hall sensor thanks to 15-pin D-SUB plug
- Extremely safe operation thanks to adjustment of the number of correction magnets on the existing motor type
- Software-supported magnet positioning
- Existing brake resistor can be used furthermore

Scope of delivery
- Attachment kit with incremental encoder and hall sensor
- Magnets for determining the rotor position
- Adhesive and template for magnet assembly
- Assembly instructions

Article no. 357299

Retrofit kit SMART

Description
- Retrofit kit for replacement of the frequency inverter on Schindler Smart type elevator systems based on ZAdyn4CA
- No replacement of the controller
- With incremental encoder for improved travel comfort

Scope of delivery
- Incremental encoder
- Adapter M16 for incremental encoder
- 3 relays (110 VAC) for signal adaptation

Article no. 357281

Retrofit kits

Retrofit incremental encoder with solid shaft

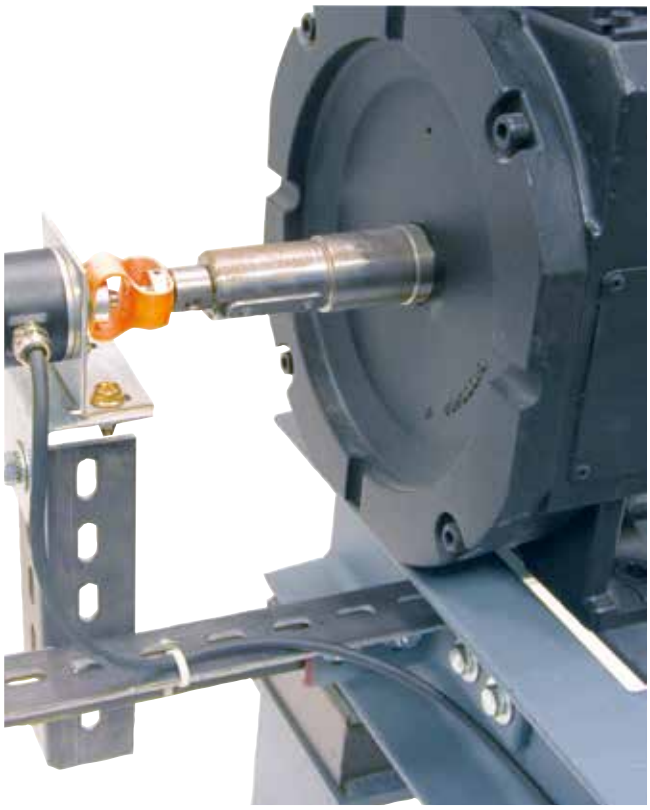

Description

- Retrofit kit for fast and simple mounting of an incremental encoder with solid shaft
- Mounting with and without hand wheel possible
- Prefabricated encoder cable

Scope of delivery

- Incremental encoder
  - Incl. cable with plug D-SUB 15-pin for ZAdyn4 and ZAdynpro
- Flex coupling
  - Thermoplastic compensation element for connection between incremental encoder and motor shaft
- Adaptor
  - For mounting the flex coupling on the motor shaft
- Motor add-on kit
  - Solid angles and struts for rigid connection to the machine frame or floor

Technical data

Type	Threaded nipple	Operating voltage incremental encoder VDC	Signal shape	Cable length m	Article no.
Retrofit kit incremental encoder	M8	4.75 ... 30	RS422 Inkremental	10,0	**70028208**
	M10				**70028209**
	M12				**70028210**
	M14				**70028211**
	M16				**70028212**
	M20				**70028327**

Retrofit kits

Retrofit kit incremental encoder with hollow shaft

Description

- Adapter for quick and simple assembly of an incremental encoder with hollow shaft
- Assembly with or without handwheel

Centring thread Motor shaft	Shaft diameter Adapter mm	**Article no.**
M10	28	**70024258**
M12		**70024259**
M16		**70024260**
M20		**70025581**

Retrofit kit ZAdyn4C

Description

- Adapter for fast and error-proof conversion of ZETADYN to ZAdyn4C
- No new control cables required
- Integrated mini contactors for activating contactor-free operation
- For 110 VAC and 230 VAC safety circuits
- Integrated outputs for existing monitoring of the motor contactors by the elevator control

Type	**Article no.**	Voltage safety chain VAC
ZETADYN 2 - ZAdyn4C 110	**357315**	110
ZETADYN 2 - ZAdyn4C 230	**357314**	230
ZETADYN 3C - ZAdyn4C 110	**357318**	110
ZETADYN 3C - ZAdyn4C 230	**357317**	230

Control and connection cables ZAdyn4

Brake release monitoring micro switches

- For ZAtop and ZAdisc
- Connection of the micro-switches for the brake release monitoring to the ZAdyn4 frequency inverter
- Prefabricated:
  - Connection side ZAdyn4: plug 5-pin
  - Connection side brake: wire end sleeves
- Halogen-free

Type	Article no.	Length m	Cable cross section mm²
L-BL-018-HX-ZA4-AE	00165936-018M	1.8	3 x 0.75
L-BL-03-HX-ZA4-AE	00165936-03M	3.0	
L-BL-05-HX-ZA4-AE	00165936-05M	5.0	
L-BL-10-HX-ZA4-AE	00165936-10M	10.0	
L-BL-15-HX-ZA4-AE	00165936-15M	15.0	
L-BL-20-HX-ZA4-AE	00165936-20M	20.0	
L-BL-25-HX-ZA4-AE	00165936-25M	25.0	

Brake release monitoring inductive proximity switches

- For ZAtop and ZAdisc
- Connection of the inductive proximity switches for the brake release monitoring to the ZAdyn4 frequency inverter
- Prefabricated:
  - Connection side ZAdyn4: plug 5-pin
  - Connection side brake: wire end sleeves
- Halogen-free

Type	Article no.	Length m	Cable cross section mm²
L-BL-018-HX-ZA4-AE-INI	00166085-018M	1.8	3 x 0.75
L-BL-03-HX-ZA4-AE-INI	00166085-03M	3.0	
L-BL-05-HX-ZA4-AE-INI	00166085-05M	5.0	
L-BL-10-HX-ZA4-AE-INI	00166085-10M	10.0	
L-BL-15-HX-ZA4-AE-INI	00166085-15M	15.0	
L-BL-20-HX-ZA4-AE-INI	00166085-20M	20.0	
L-BL-25-HX-ZA4-AE-INI	00166085-25M	25.0	

Control and connection cables ZAdyn4

Brake resistor cable

- Cable to connect the brake resistor BR..-3 to the ZAdyn4 frequency inverter
  and BR100-BOX
- Prefabricated
- Integrated conductors for temperature monitoring
- Halogen-free

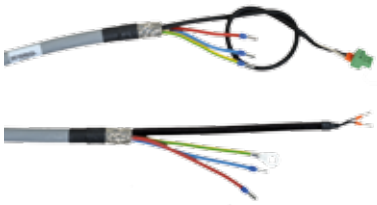

L-BR-..-HX-2,5-ZA4
L-BR-..-HX-6-ZA4

L-BR-..-HX-16-ZA3/4

Frequency inverter type	Type	Article no.	Cable length m	Cable cross section mm²
ZAdyn4C 011 ZAdyn4C 013 ZAdyn4C 017 ZAdyn4C 023	**L-BR-03-HX-2,5-ZA4** **L-BR-05-HX-2,5-ZA4**	**00165932-03M** **00165932-05M**	3.0 5.0	3 x 2.5 + 2 x 0.5
ZAdyn4C 032 ZAdyn4C 040 ZAdyn4C 050 ZAdyn4C 062 ZAdyn4C 074	**L-BR-03-HX-6-ZA4** **L-BR-05-HX-6-ZA4**	**00165933-03M** **00165933-05M**	3.0 5.0	3 x 6.0 + 2 x 0.5
ZAdyn4B 110 ZAdyn4B 180	**L-BR-03-HX-16-ZA3/4** **L-BR-05-HX-16-ZA3/4**	**00165724** **00165725**	3.0 5.0	3 x 16.0 + 2 x 0.5

Cable BR100-BOX

- Cable for connecting the BR100-BOX to ZAdyn4B 110/180
- Prefabricated
- Integrated wires for temperature monitoring
- Halogen-free

Frequency inverter type	Type	Article no.	Cable length m	Cable cross section mm²
ZAdyn4B 110/180	**L-BR-03-HX-16-BR-BOX**	**00165953-03M**	3.0	3x16.0 + 2x0.5

Connection cable motor temperature monitoring PTC thermistor

- Connection of the PTC to the ZAdyn4 frequency inverter
- Prefabricated:
  - Connection side ZAdyn4: plug 4-pin
  - Connection side motor: wire end sleeves
- Halogen-free

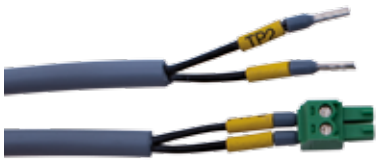

Type	Article no.	Cable length m	Cable cross section mm²
L-KL-018-HX-ZA3/4-AE	**00165801**	1.8	2 x 0.75
L-KL-03-HX-ZA3/4-AE	**00165650**	3.0	
L-KL-05-HX-ZA3/4-AE	**00165846**	5.0	
L-KL-10-HX-ZA3/4-AE	**00165800**	10.0	
L-KL-15-HX-ZA3/4-AE	**00165847**	15.0	
L-KL-20-HX-ZA3/4-AE	**00165801-20M**	20.0	
L-KL-25-HX-ZA3/4-AE	**00165801-25M**	25.0	

Control and connection cables ZAdyn4

Control cable DCP

Standard cables

- Prefabricated:
  - Connection side ZAdyn4: plug 4-pin
  - Connection side elevator controller: wire end sleeves
- Halogen-free

Type	Article no.	Cable length m	Cable cross section mm²
L-SL-03-HX-ZA-DCP	00164123	3.0	2 x 2 x 0.25
L-SL-05-HX-ZA-DCP	00165925	5.0	
L-SL-10-HX-ZA-DCP	00164136	10.0	
L-SL-25-HX-ZA-DCP	00164137	25.0	
L-SL-50-HX-ZA-DCP	00164138	50.0	

Control-dependent special cable NEW LIFT

- Prefabricated:
  - Connection side ZAdyn4: plug 4-pin
  - Connection side elevator controller: D-SUB 9-pin
- Halogen-free

Type	Article no.	Cable length m	Cable cross section mm²
L-SL-03-HX-ZA-DCP-1	00164048	3.0	2 x 2 x 0.25
L-SL-05-HX-ZA-DCP-1	00165926	5.0	
L-SL-10-HX-ZA-DCP-1	00164049	10.0	
L-SL-25-HX-ZA-DCP-1	00164050	25.0	
L-SL-50-HX-ZA-DCP-1	00164051	50.0	

Control and connection cables ZAdyn4

STO control cable

- Activation of the Safe Torque Off (STO) function
- Prefabricated:
  - Connection side ZAdyn4: plug 6-pin
  - Connection side elevator controller: wire end sleeves
- Halogen-free

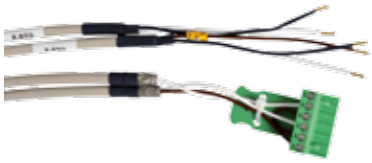

Type	Article no.	Cable length m	Cable cross section mm²
L-SL-03-HX-ZA4-STO	00165938-03M	3.0	3 x 0.5
L-SL-05-HX-ZA4-STO	00165938-05M	5.0	
L-SL-10-HX-ZA4-STO	00165938-10M	10.0	
L-SL-25-HX-ZA4-STO	00165938-25M	25.0	
L-SL-50-HX-ZA4-STO	00165938-50M	50.0	

Control cable digital inputs

- Activation of the digital inputs through the elevator controller
- Prefabricated:
  - Connection side ZAdyn4: plug. 13-pin
  - Connection side elevator controller: wire end sleeves
- Halogen-free

Type	Article no.	Cable length m	Cable cross section mm²
L-SL-03-HX-ZA4-IN	00165934-03M	3.0	12 x 0.5
L-SL-05-HX-ZA4-IN	00165934-05M	5.0	
L-SL-10-HX-ZA4-IN	00165934-10M	10.0	
L-SL-25-HX-ZA4-IN	00165934-25M	25.0	
L-SL-50-HX-ZA4-IN	00165934-50M	50.0	

Control cable digital outputs

- Evaluation of the digital outputs through the elevator controller
- Prefabricated:
  - Connection side ZAdyn4: plug. 10-pin
  - Connection side elevator controller: wire end sleeves
- Halogen-free

Type	Article no.	Cable length m	Cable cross section mm²
L-SL-03-HX-ZA4-OUT	00165935-03M	3.0	10 x 0.5
L-SL-05-HX-ZA4-OUT	00165935-05M	5.0	
L-SL-10-HX-ZA4-OUT	00165935-10M	10.0	
L-SL-25-HX-ZA4-OUT	00165935-25M	25.0	
L-SL-50-HX-ZA4-OUT	00165935-50M	50.0	

Plug set ST4C

- Consisting of all connectors for connecting the ZAdyn4

Article no. 357258

Connection cables ZAdynpro

Brake resistor cable

- Cable to connect the brake resistor BR..-3 to the ZAdynpro frequency inverter
- Prefabricated
- Integrated conductors for temperature monitoring
- Halogen-free

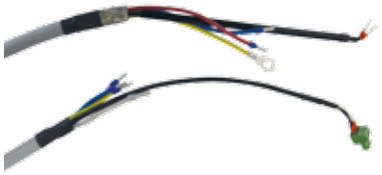

Frequency inverter type	Type	Article no.	Cable length m	Cable cross section mm²
ZAdynpro 011-032	L-BR-03-HX-2.5-ZAp	00166112-03M	3.0	3 x 6.0 + 2 x 0.5
	L-BR-03-HX-6-ZAp	00166113-03M	3.0	3 x 6.0 + 2 x 0.5

Control and connection cables ZAsbc4

Brake control

- For ZAtop and ZAdisc
- Connection of the brake coils on ZAsbc4
- Prefabricated:
  - Connection side ZAsbc4: plug 4-pin
  - Connection side brake: wire end sleeves
- Halogen-free

Type	Article no.	Cable length m	Cable cross section mm²
L-BA-018-HX-SBC4-AE	00166059-018M	1.8	2 x 2 x 1.0
L-BA-03-HX-SBC4-AE	00166059-03M	3.0	
L-BA-05-HX-SBC4-AE	00166059-05M	5.0	
L-BA-10-HX-SBC4-AE	00166059-10M	10.0	
L-BA-15-HX-SBC4-AE	00166059-15M	15.0	
L-BA-20-HX-SBC4-AE	00166059-20M	20.0	
L-BA-25-HX-SBC4-AE	00166059-25M	25.0	

ZAsbc4C wiring harness

- 5-part prefabricated wiring harness for connecting the elevator controller to ZAsbc4C
  - Supply voltage
  - Monitoring safety circuit
  - Activation. emergency operation and brake test
  - Test overvoltage protection
  - Status monitoring
- Prefabricated
  - Connection side ZAsbc4: plugs
  - Connection side controller: wire end sleeves
- Halogen-free

Type	Article no.	Cable length m	Cable cross section mm²
LS-SBC4-03-HX-ST	357289-03M	3.0	3 x 1.5 (Supply) 5 x 0.75 (Monitoring. safety circuit) 3 x 0.75 (Activation. emergency operation and brake test) 2 x 0.75 (Test overvoltage protection) 2 x 0.75 (Status monitoring)
LS-SBC4-05-HX-ST	357289-05M	5.0	
LS-SBC4-10-HX-ST	357289-10M	10.0	
LS-SBC4-25-HX-ST	357289-25M	25.0	
LS-SBC4-50-HX-ST	357289-50M	50.0	

Connection cables ZApad

Data cable ZApad / ZAmon STICK

Connection of the ZApad and ZAmon STICK to
- ZAdyn4
- ZAdynpro
- ZArec4
- EVAC 3C (only ZApad)

Type	Article no.	Cable length m
L-DL-005-HX-RJ45	00159973	0.5
L-DL-10-HX-RJ45	00159967	10.0
L-DL-25-HX-RJ45	00159968	25.0
L-DL-50-HX-RJ45	00164122	50.0

Modular coupler RJ

- Coupler to connect the cable type L-DL-...-HX-RJ45
- Double jack RJ45

Article no. 00155975

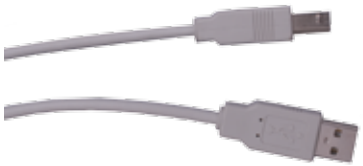

ZAmon data cable

- Connection of the ZApad to a notebook or PC to be able to use the ZAmon software
- USB 2.0 connection line A/B
- Halogen-free
- Length: 1.8 m
- Type: L-DL-018-HX-USB-A-B

Article no. 00159946

ZArec wiring harness

LS-ZArec4C-..-HX-...-ZA3/4

- 2-part prefabricated wiring harness for connecting the ZArec to ZETADYN 3 and ZAdyn4:
  - Signal transmission ZArec - ZETADYN 3 / ZAdyn4
  - Connection DC-link voltage ZArec - ZETADYN 3 / ZAdyn4
  - Halogen-free

Type	Article no.	Frequency inverter	Cable length m	Cable cross section mm²
LS-ZArec4C-03-HX-023-ZA3/4	357276	ZETADYN 3BF011-023 ZETADYN 3C011-023 ZAdyn4C 011-023 ZAdynpro 011-023	3.0	6 x 0.75 (Signals) 3 x 2.5 (DC-link)
LS-ZArec4C-05-HX-023-ZA3/4	357277		5.0	6 x 0.75 (Signals) 3 x 2.5 (DC-link)
LS-ZArec4C-03-HX-074-ZA3/4	357278	ZETADYN 3BF032-074 ZETADYN 3C032-074 ZAdyn4C 032-074 ZAdynpro 032	3.0	6 x 0.75 (Signals) 3 x 6.0 (DC-link)
LS-ZArec4C-05-HX-074-ZA3/4	357279		5.0	6 x 0.75 (Signals) 3 x 6.0 (DC-link)

EVAC battery set and wiring harness

Battery set EVAC-BATT

Description

- Selection is made depending on the nominal current of the motor and the duration or number of evacuations

Technical data

Type	Article no.	Rated voltage	Rated capacity	Rated current	Weight
		VDC	Ah	A	kg
032-120-24	357234	120	24.0	32	2 x 50
050-120-24	357235	120	24.0	50	2 x 50
074-120-24	357236	120	24.0	74	2 x 50
032-180-7.2	357238	180	7.2	32	24 + 26
032-180-24	357242	180	24.0	32	3 x 50
050-180-24	357243	180	24.0	50	3 x 50
074-180-24	357244	180	24.0	74	3 x 50

Dimensions mm

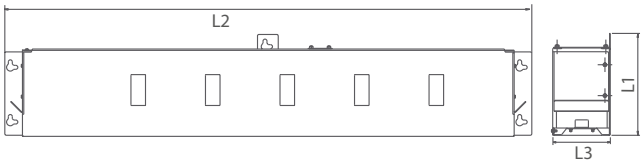

Type	L1	L2	L3
032-120-24	231	1195	130
050-120-24			
074-120-24			
032-180-7.2	205	948	116
032-180-24	231	1195	130
050-180-24			
074-180-24			

EVAC 3C wiring harness

LS-EVAC3C-..-HX-...-ZA3/4

- 3-part wiring harness for connecting the ZETADYN 3 / ZAdyn4 and the EVAC BATT to EVAC 3C:
  - Power supply of the ZETADYN 3 / ZAdyn4 by EVAC 3C
  - Signal transmission EVAC 3C ⇄ ZETADYN 3 / ZAdyn4
  - Connection battery set EVAC BATT
- Halogen-free

Type	Article no.	Cable length	Cable cross-section EVAC 3C ⇄ ZETADYN 3 / ZAdyn4	Cable cross-section EVAC 3C ⇄ EVAC BATT
		m	mm²	mm²
LS-EVAC3C-03-HX-032-ZA3/4	357239	3.0	4 x 6.0 (supply) 4 x 0.5 (signals)	3 x 6.0 + 2 x 0.5
LS-EVAC3C-03-HX-050-ZA3/4	357240	3.0	4 x 10.0 (supply) 4 x 0.5 (signals)	3 x 6.0 + 2 x 0.5
LS-EVAC3C-03-HX-074-ZA3/4	357241	3.0	4 x 25.0 (supply) 4 x 0.5 (signals)	4 x 10.0 + 2 x 1.0

LS-EVAC3C-..-HX-ST

- 3-part wiring harness for connecting the elevator controller and the main switch monitoring to EVAC 3C:
  - Control power supply through EVAC 3C
  - Signal transmission EVAC 3C ⇄ Controller
  - Main switch monitoring
- Halogen-free

Type	Article no.	Cable length	Cable cross-section EVAC 3C ⇄ Controller	Cable cross-section EVAC 3C ⇄ Main switch
		m	mm²	mm²
LS-EVAC3C-03-HX-ST	357247	3.0	3 x 1.5 (supply) 3 x 0.5 (signals)	2 x 0.75 (monitoring)
LS-EVAC3C-10-HX-ST	357248	10.0	3 x 1.5 (supply) 3 x 0.5 (signals)	2 x 0.75 (monitoring)

Motor cables

Standard

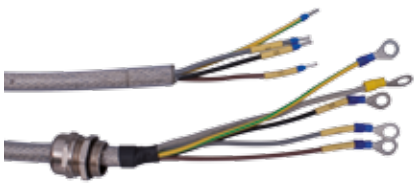

For motor type ZAsyn SM700 and externally procured motors

- Cable for connecting the motor to frequency inverter type ZAdyn
- Including cable gland
- Prefabricated:
  - Connection side motor: wire end sleeves
  - Connection side ZAdyn: wire end sleeves

Rated current* A	Cable cross section mm²	Cable gland	Ring cable lug for terminal board	Fits motor	Cable length m	Type	Article no.
20	4 x 2.5	M25	M6	VFD132 BD132 SM180	5.0	L-ML-05-YY-2,5-M6-AE	356035-05M
					10.0	L-ML-10-YY-2,5-M6-AE	356035-10M
					15.0	L-ML-15-YY-2,5-M6-AE	356035-15M
					20.0	L-ML-20-YY-2,5-M6-AE	356035-20M
					25.0	L-ML-25-YY-2,5-M6-AE	356035-25M
			M8	SM200.40 VFD160	5.0	L-ML-05-YY-2,5-M8-AE	356038-05M
					10.0	L-ML-10-YY-2,5-M8-AE	356038-10M
					15.0	L-ML-15-YY-2,5-M8-AE	356038-15M
					20.0	L-ML-20-YY-2,5-M8-AE	356038-20M
					25.0	L-ML-25-YY-2,5-M8-AE	356038-25M
25	4 x 4.0	M32	M6	VFD132 BD132 SM180	5.0	L-ML-05-YY-4-M6-AE	356036-05M
					10.0	L-ML-10-YY-4-M6-AE	356036-10M
					15.0	L-ML-15-YY-4-M6-AE	356036-15M
					20.0	L-ML-20-YY-4-M6-AE	356036-20M
					25.0	L-ML-25-YY-4-M6-AE	356036-25M
			M8	SM200.40 SM860 VFD160	5.0	L-ML-05-YY-4-M8-AE	356039-05M
					10.0	L-ML-10-YY-4-M8-AE	356039-10M
					15.0	L-ML-15-YY-4-M8-AE	356039-15M
					20.0	L-ML-20-YY-4-M8-AE	356039-20M
					25.0	L-ML-25-YY-4-M8-AE	356039-25M
35	4 x 6.0	M32	M6	VFD132 BD132 SM180	5.0	L-ML-05-YY-6-M6-AE	356037-05M
					10.0	L-ML-10-YY-6-M6-AE	356037-10M
					15.0	L-ML-15-YY-6-M6-AE	356037-15M
					20.0	L-ML-20-YY-6-M6-AE	356037-20M
					25.0	L-ML-25-YY-6-M6-AE	356037-25M
			M8	SM200.40 SM250 SM860 VFD180	5.0	L-ML-05-YY-6-M8-AE	356040-05M
					10.0	L-ML-10-YY-6-M8-AE	356040-10M
					15.0	L-ML-15-YY-6-M8-AE	356040-15M
					20.0	L-ML-20-YY-6-M8-AE	356040-20M
					25.0	L-ML-25-YY-6-M8-AE	356040-25M
50	4 x 10.0	M40	M8	SM200.40 SM250 SM860 VFD160-225	5.0	L-ML-05-YY-10-M8-AE	356041-05M
					10.0	L-ML-10-YY-10-M8-AE	356041-10M
					15.0	L-ML-15-YY-10-M8-AE	356041-15M
					20.0	L-ML-20-YY-10-M8-AE	356041-20M
					25.0	L-ML-25-YY-10-M8-AE	356041-25M
63	4 x 16.0	M40	M8	SM200.40 SM250 SM860 VFD180-250	5.0	L-ML-05-YY-16-M8-AE	356042-05M
					10.0	L-ML-10-YY-16-M8-AE	356042-10M
					15.0	L-ML-15-YY-16-M8-AE	356042-15M
					20.0	L-ML-20-YY-16-M8-AE	356042-20M
					25.0	L-ML-25-YY-16-M8-AE	356042-25M

* The stated rated currents are rated according to DIN VDE 0298-4 for laying system B2 and a max. ambient temperature of 40° C.

Rated current* A	Cable cross section mm²	Cable gland	Ring cable lug for terminal board	Fits motor	Cable length m	Type	Article no.
80	4 x 25.0	M50	M8	SM225 SM250 SM860 VFD180-250	5.0	L-ML-05-YY-25-M8-AE	356043-05M
					10.0	L-ML-10-YY-25-M8-AE	356043-10M
					15.0	L-ML-15-YY-25-M8-AE	356043-15M
					20.0	L-ML-20-YY-25-M8-AE	356043-20M
					25.0	L-ML-25-YY-25-M8-AE	356043-25M
100	4 x 35.0	M50	M8	SM225	5.0	L-ML-05-YY-35-M8-AE	356044-05M
					10.0	L-ML-10-YY-35-M8-AE	356044-10M
					15.0	L-ML-15-YY-35-M8-AE	356044-15M
					20.0	L-ML-20-YY-35-M8-AE	356044-20M
					25.0	L-ML-25-YY-35-M8-AE	356044-25M
			M10	SM250 SM860 VFD180-250	5.0	L-ML-05-YY-35-M10-AE	356033-05M
					10.0	L-ML-10-YY-35-M10-AE	356033-10M
					15.0	L-ML-15-YY-35-M10-AE	356033-15M
					20.0	L-ML-20-YY-35-M10-AE	356033-20M
					25.0	L-ML-25-YY-35-M10-AE	356033-25M
125	4 x 50.0	M50	M10	SM250 SM860 VFD180-250	10.0	L-ML-10-YY-50-M10-AE	356068-10M
160	4 x 70.0	M50	M12	SM250	5.0	L-ML-05-YY-70-M12-AE	356034-05M
					10.0	L-ML-10-YY-70-M12-AE	356034-10M
					15.0	L-ML-15-YY-70-M12-AE	356034-15M
					20.0	L-ML-20-YY-70-M12-AE	356034-20M
200	4 x 95.0	M63	M12	SM250	10.0	L-ML-10-YY-95-M12-AE	356045-10M
					20.0	L-ML-20-YY-95-M12-AE	356045-20M

* The stated rated currents are rated according to DIN VDE 0298-4 for laying system B2 and a max. ambient temperature of 40° C.

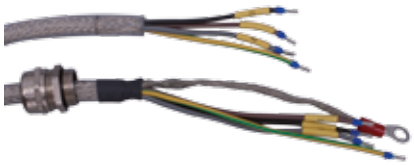

For motor type ZAtop, ZAsyn SM860 and VFD

- Cable for connecting the motor to frequency inverter type ZETADYN / ZAdyn
- Including cable gland
- Prefabricated:
  - Connection side motor: ring cable lug
  - Connection side ZETADYN / ZAdyn: wire end sleeves

Rated current* A	Cable cross section mm²	Cable gland	Fits motor	Cable length m	Type	Article no.
20.0	4 x 2.5	M25	SL506 SL510 SM700	10.0	L-ML-10-YY-2,5-AE-AE	356016-10M
25.0	4 x 4.0	M32	SL506 SL510 SM700	10.0	L-ML-10-YY-4-AE-AE	356017-10M
35.0	4 x 6.0	M32	SL506 SL510 SM700	10.0	L-ML-10-YY-6-AE-AE	356018-10M
50.0	4 x 10.0	M25	SL510 SM700	10.0	L-ML-10-YY-10-AE-AE	356019-10M
63.0	4 x 16.0	M40	SL510 SM700	10.0	L-ML-10-YY-16-AE-AE	356020-10M
80.0	4 x 25.0	M50	SM700	10.0	L-ML-10-YY-25-AE-AE	356021-10M

* The stated rated currents are rated according to DIN VDE 0298-4 for laying system B2 and a max. ambient temperature of 40° C.

Motor cables

Halogen-free

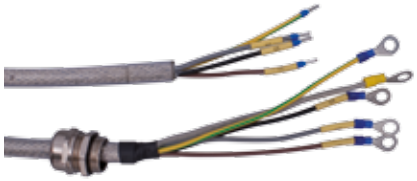

For motor type ZAtop, ZAsyn SM860 and VFD

- Cable for connecting the motor to frequency inverter type ZETADYN / ZAdyn
- Including cable gland
- Prefabricated:
  - Connection side motor: ring cable lug
  - Connection side ZETADYN / ZAdyn: wire end sleeves

Rated current* A	Cable cross section mm²	Cable gland	Ring cable lug for terminal board	Fits motor	Cable length m	**Type**	**Article no.**
20	4 x 2.5	M25	M8	SM200.40 SM225 VFD160	5.0	**L-ML-05-HX-2,5-M8-AE**	**356056-05M**
					10.0	**L-ML-10-HX-2,5-M8-AE**	**356056-10M**
					15.0	**L-ML-15-HX-2,5-M8-AE**	**356056-15M**
					20.0	**L-ML-20-HX-2,5-M8-AE**	**356056-20M**
					25.0	**L-ML-25-HX-2,5-M8-AE**	**356056-25M**
25	4 x 4.0	M32	M8	SM200.40 SM225 VFD160	5.0	**L-ML-05-HX-4-M8-AE**	**356057-05M**
					10.0	**L-ML-10-HX-4-M8-AE**	**356057-10M**
					15.0	**L-ML-15-HX-4-M8-AE**	**356057-15M**
					20.0	**L-ML-20-HX-4-M8-AE**	**356057-20M**
					25.0	**L-ML-25-HX-4-M8-AE**	**356057-25M**
35	4 x 6.0	M32	M8	SM200.40 SM225 SM250 VFD160	5.0	**L-ML-05-HX-6-M8-AE**	**356058-05M**
					10.0	**L-ML-10-HX-6-M8-AE**	**356058-10M**
					15.0	**L-ML-15-HX-6-M8-AE**	**356058-15M**
					20.0	**L-ML-20-HX-6-M8-AE**	**356058-20M**
					25.0	**L-ML-25-HX-6-M8-AE**	**356058-25M**
50	4 x 10.0	M40	M8	SM200.40 SM225 SM250 SM860 VFD160-225	5.0	**L-ML-05-HX-10-M8-AE**	**356059-05M**
					10.0	**L-ML-10-HX-10-M8-AE**	**356059-10M**
					15.0	**L-ML-15-HX-10-M8-AE**	**356059-15M**
					20.0	**L-ML-20-HX-10-M8-AE**	**356059-20M**
					25.0	**L-ML-25-HX-10-M8-AE**	**356059-25M**
63	4 x 16.0	M40	M8	SM200.40 SM225 SM250 VFD180-250	5.0	**L-ML-05-HX-16-M8-AE**	**356060-05M**
					10.0	**L-ML-10-HX-16-M8-AE**	**356060-10M**
					15.0	**L-ML-15-HX-16-M8-AE**	**356060-15M**
					20.0	**L-ML-20-HX-16-M8-AE**	**356060-20M**
					25.0	**L-ML-25-HX-16-M8-AE**	**356060-25M**
80	4 x 25.0	M50	M8	SM225 SM250 VFD180-250	5.0	**L-ML-05-HX-25-M8-AE**	**356061-05M**
					10.0	**L-ML-10-HX-25-M8-AE**	**356061-10M**
					15.0	**L-ML-15-HX-25-M8-AE**	**356061-15M**
					20.0	**L-ML-20-HX-25-M8-AE**	**356061-20M**
					25.0	**L-ML-25-HX-25-M8-AE**	**356061-25M**
100	4 x 35.0	M50	M10	SM250	5.0	**L-ML-05-HX-35-M10-AE**	**356062-05M**
					10.0	**L-ML-10-HX-35-M10-AE**	**356062-10M**
					15.0	**L-ML-15-HX-35-M10-AE**	**356062-15M**
					20.0	**L-ML-20-HX-35-M10-AE**	**356062-20M**
					25.0	**L-ML-25-HX-35-M10-AE**	**356062-25M**

* The stated rated currents are rated according to DIN VDE 0298-4 for laying system B2 and a max. ambient temperature of 40° C.

Connection box for shielded motor cables

Description

- Simple and EMC-conform extension of ZIEHL-ABEGG motor cables
- Cable glands on both sides
- Wire cross section from 4 x 2.5 mm² to 4 x 16 mm²
- Dimensions without cable glands
  (W x H x T) in mm: 260 x 160 x 91

Article no. 70026751

EMC cable glands

Type	Article no.	EMC lock nut** Article no.	∅ Motor cable mm
M25 x 1,5	02002881	02002803	4 x 2.5
M32 x 1,5	02002184	02002198	4 x 4.0 4 x 6.0
M40 x 1,5	02002185	02002199	4 x 10 4 x 16
M50 x 1,5	02002186	02002200	4 x 25 4 x 35

* Reducing sealing ring (Article no. 02008019) required
** With cutting edge for secure contacting even on painted housings

Encoder cables

Standard

For absolute encoder (synchronous motors)

- Cable for connecting the absolute encoder to frequency inverter type ZAdyn / ZETADYN
- For ZAtop. ZAsyn and ZAdisc type motors
- Prefabricated

Encoder type	Frequency inverter	Encoder connection	Frequency inverter connection	Cable cross section mm²	Cable length m	Type	Article no.
ECN1313	ZAdyn	Jack 12 pin	Plug D-SUB 15-pin	6 x 2 x 0.14	1.2	-	00201388-1.2M
ECN113 ECN1313	ZETADYN 3 ZAdyn	Jack M16 x 0.75 (KV120)	Plug D-SUB 15-pin	6 x 2 x 0.14	5.0	L-GL-05-YY-ZA-ECN	00159923
					10.0	L-GL-10-YY-ZA-ECN	00155050
					15.0	L-GL-15-YY-ZA-ECN	00166102
					20.0	L-GL-20-YY-ZA-ECN	00166103
					25.0	L-GL-25-YY-ZA-ECN	00159925
ERN1387	ZETADYN 3 ZAdyn	Jack M23 x 1	Plug D-SUB 15-pin	8 x 2 x 0.14	10.0	L-GL-10-YY-ZA3-ERN1387	00159964
						L-GL-10-YY-ZA4-ERN1387	00165948-10M

For incremental encoder (asynchronous motors)

- Cable to connect the incremental encoder to frequency inverter type ZAdyn / ZETADYN
- For VFD type motors
- Prefabricated

Encoder type	Frequency inverter	Encoder connection	Frequency inverter connection	Cable cross section mm²	Cable length m	Type	Article no.
ET2S	ZETADYN 3 ZAdyn*	Jack M16 x 0.75 (KV120)	Plug D-SUB 9-pin	6 x 0.14	10.0	L-GL-10-YY-ZA-ET2S	00159927

* ZAdyn only with D-SUB 9 ⇄ D-SUB 15 adapter (article no. 00165930-004M)

Halogen-free

For absolute encoders (synchronous motors)

- Cable to connect the absolute encoder to frequency inverter type ZAdyn / ZETADYN
- For ZAtop. ZAsyn and ZAdisc type motors
- Prefabricated
- Halogen-free

Encoder type	Frequency inverter	Encoder connection	Frequency inverter connection	Cable cross section mm²	Cable length m	Type	Article no.
ECN113 ECN1313	ZETADYN 3 ZAdyn	Jack M16 x 0.75 (KV120)	Plug D-SUB 15-pin	6 x 2 x 0.14	1.8	L-GL-018-HX-ZA-ECN	00165713
					3.0	L-GL-03-HX-ZA-ECN	00165644
					5.0	L-GL-05-HX-ZA-ECN	00166095
					10.0	L-GL-10-HX-ZA-ECN	00165615
					15.0	L-GL-15-HX-ZA-ECN	00157818
					20.0	L-GL-20-HX-ZA-ECN	00166104
					25.0	L-GL-25-HX-ZA-ECN	00165616

Encoder cables / adapter cables

Adapter

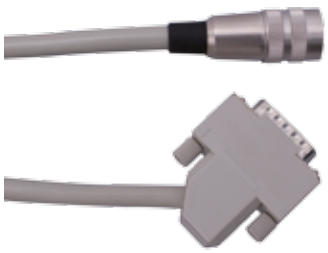

Adapter for encoder cables

- Connection of cables with D-SUB plug to ZAdyn4
- Prefabricated
- Halogen-free

Elevator machine	Encoder	Connection side encoder cable	Frequency inverter connection	Cable cross section mm²	Cable length m	Type	Article no.
ZIEHL-ABEGG	Incremental	Jack D-SUB 9-pin	Plug D-SUB 15-pin	6 x 2 x 0.14	0.4	**L-GL-004-HX-ZA-ASM-9-15**	**00165930-004M**
	Incremental	Jack D-SUB 15-pin	Plug D-SUB 9-pin			**L-GL-004-HX-ZA-ASM-15-9**	**00165931-004M**
Thyssen	Absolute (EnDat)	Jack D-SUB 15-pin	Plug D-SUB 15-pin			**L-GL-004-HX-THY-ZA-ECN**	**00166089-004M**
	Incremental	Jack D-SUB 9-pin	Plug D-SUB 15-pin			**L-GL-004-HX-THY-ZA-ASM**	**00166090-004M**

Plug connector X-ENC15

- Adapter plug for connecting absolute encoder to ZAdyn4
- D-SUB 15-pin to plug-in connection

Article no. 00152676

Adapter cable encoder ⇆ encoder cable

Encoder type	Article no.	Cable length m	Encoder connection	Encoder cable connection	Cable cross section mm²
ECN 1313	**00159930**	0.245	Jack 12 pin	Plug M16 x 0.75 (SV120)	12 x 0.14
	00159953	0.560			
	00159933	0.245		Plug M23 x 1	12 x 0.14
ERN 1387	**00159931**	0.245	Jack 14 pin	Plug M16 x 0.75 (SV120)	12 x 0.14
	00159934	0.245		Plug M23 x 1	14 x 0.14
ERN 1326	**00159942**	0.245	Jack 16 pin	Plug M23 x 1	16 x 0.14

Encoder cables

Extension cables

- For incremental encoder and absolute encoder with connection D-SUB 15-pin*
- Prefabricated
- Only in combination with encoder cable

Connection side encoder cable	Frequency inverter connection	Cable cross section mm²	Cable length m	Type	Article no.
Jack D-SUB 15-pin	Plug D-SUB 15-pin	6 x 2 x 0.25	5.0	**L-GL-05-YY-ZA-SYN-EXT**	**00159952-05M**
			10.0	**L-GL-10-YY-ZA-SYN-EXT**	**00159952**
Jack M16 x 0.75 (KV120)	Plug M16 x 0.75 (SV120)	6 x 2 x 0.14	10.0	**L-GL-10-HX-ECN-EXT-KV120**	**00165665-10M**

* for incremental encoder with connection D-SUB 9-pin the adapter article no. 00165930-004M is required in addition

For frequency inverters from other manufacturers

For absolute encoders (synchronous motors)

- Cable to connect the absolute encoder to frequency inverters from other manufacturers
- For ZAtop. ZAsyn and ZAdisc type motors
- Prefabricated

Encoder type	Frequency inverter	Encoder connection	Frequency inverter connection	Cable cross section mm²	Cable length m	Type	Article no.
ECN113 ECN1313	Arkel Step	Jack M16 x 0.75 (KV120)	Plug D-SUB 15-pin	6 x 2 x 0.14	10.0	**L-GL-10-YY-AR/ST-ECN**	**00166052-10M**
	FUJI		Plug 16-pin MC1.5 / Phoenix		5.0	**L-GL-05-YY-FUJI-LM1-ENC** **L-GL-05-YY-FUJI-LM2-ENC**	**00165827-05M** **00166097-05M**
					10.0	**L-GL-10-YY-FUJI-LM1-ENC** **L-GL-10-YY-FUJI-LM2-ENC**	**00165827** **00166097-10M**
	KEB		Plug D-SUB 15-pin		5.0	**L-GL-05-YY-KEB-F5-ENC**	**00157813**
					10.0	**L-GL-10-YY-KEB-F5-ENC**	**00159734**
	Schindler		Plug D-SUB 15-pin		5.0	**L-GL-05-YY-SCH-ENC**	**00159922**
					10.0	**L-GL-10-YY-SCH-ENC**	**00159951**
					20.0	**L-GL-20-YY-SCH-ENC**	**00159954**
	independent		Wire-end sleeves		10.0	**L-GL-10-YY-ECN/ERN-AE**	**02013478-10M**
ERN1387	GEFRAN / SIEI		Plug D-SUB 15-pin		10.0	**L-GL-10-YY-SIEI-ERN1387**	**00159941**
ERN1326	OTIS	M23 x 1	Jack M23 x 1	3 x 2 x 0.25	10.0	**L-GL-10-YY-OTIS-ERN1326**	**02013893-10M**
			WAGO 734-108		20.0	**L-GL-20-YY-OTIS-ERN1326**	**02013893-20M**

Incremental encoder

Hollow shaft

Description

- For motor types VFD and other asynchronous motors
- Signal shape: sine or square
- Speed: max. 3500 rpm
- Phase shift: 90°
- With prefabricated connection cable
- Protection class: IP54

Type	Article no.	Shaft diameter mm	Signal shape	Reso-lution ppr	Signal tracks	Operating voltage VDC	Frequency inverter connection	Cable length m	For frequency inverter
ET2R-1024/28/05V	359010	28	TTL	1024	A, B, /A, /B	5.0	Wire-end sleeves	10.0	-
ET2R-1024/28/05V-1	359026		TTL	1024	A, B, /A, /B, N	5.0	D-SUB 9-pin	10.0	ZETADYN / ZAdyn*
ET2S-1024/28/05V-15	02014700		1 V_{SS}	1024	A, B, /A, /B	5.0	D-SUB 15-pin	10.0	ZETADYN** / ZAdyn
ET2R-1024/28/30V	359004		HTL	1024	A, B	10…30	Wire-end sleeves	10.0	-
ET2R-2500/28/05V-1	359023		TTL	2500	A, B, /A, /B, N	5.0	D-SUB 9-pin	10.0	ZETADYN / ZAdyn*
ET2R-1024/38/05V	359011	38	TTL	1024	A, B, /A, /B	5.0	Wire-end sleeves	10.0	-
ET2R-1024/38/05V-1	359027		TTL	1024	A, B, /A, /B, N	5.0	D-SUB 9-pin	10.0	ZETADYN / ZAdyn*
ET2S-1024/38/05V-15	02014701		1 V_{SS}	1024	A, B, /A, /B	5.0	D-SUB 15-pin	10.0	ZETADYN** / ZAdyn
ET2S-1024/38/05V-2	02006794		1 V_{SS}	1024	A, B, /A, /B	5.0	M16 x 0.75 (SV120) 12-pin	0.5	-
ET2R-1024/38/30V	359005		HTL	1024	A, B	10…30	Wire-end sleeves	10.0	-
ET2R-2500/38/05V-1	359024		TTL	2500	A, B, /A, /B, N	5.0	D-SUB 9-pin	10.0	ZETADYN / ZAdyn*
ET2R-4096/38/05V-1	00037299		TTL	4096	A, B, /A, /B, N	5.0	D-SUB 9-pin	10.0	ZETADYN / ZAdyn*
ET2R-1024/42/05V	359012	42	TTL	1024	A, B, /A, /B	5.0	Wire-end sleeves	10.0	-
ET2R-1024/42/05V-1	359028		TTL	1024	A, B, /A, /B, N	5.0	D-SUB 9-pin	10.0	ZETADYN / ZAdyn*
ET2R-1024/42/30V	359006		HTL	1024	A, B	10…30	Wire-end sleeves	10.0	-
ET2R-2500/42/05V-1	359025		TTL	2500	A, B, /A, /B, N	5.0	D-SUB 9-pin	10.0	ZETADYN / ZAdyn*

* ZAdyn4 and ZAdynpro only with D-SUB 9 ⇄ D-SUB 15 adapter (article no. 00165930-004M)
** ZETADYN 2 and ZETADYN 3 (older than May 2012) only with D-SUB 15 ⇄ D-SUB 9 adapter (article no. 00165931-004M)

Incremental encoder

Solid shaft

Description

- For VFD motor types and other asynchronous motors
- Signal shape: square
- Speed: max. 3500 rpm
- Phase shift: 90°
- With prefabricated connection cable
- Protection class: IP54

Type	Article no.	Shaft diameter mm	Signal shape	Resolu-tion ppr	Signal tracks	Operating voltage VDC	Frequency inverter connection	Cable length m	For frequency inverter
ET2R-1024/10/30V	359020	10	HTL	1024	A, B	10...30	Wire-end sleeves	10.0	-
ERN1321	02010592	9.25 Cone 1:10	TTL	4096	A, B, /A, /B	5,0	Board plug 12 pin	-	-

Absolute encoder

Hollow shaft

Description

- For ZAtop motor type
- Signal shape speed: sine
- Speed: max. 3500 rpm
- Phase shift: 90°
- Prefabricated connection cable
- Protection class: IP64

Type	Article no.	Shaft diameter mm	Interface absolute value	Resolution ppr	Signal tracks	Operating voltage VDC	Connection	Cable length m
ECN113 EnDat 2048 Hiatus	01009635	50	EnDat 01	2048	A, B, /A, /B	5.0	M16 x 1 (SV120) 12-pin	0.5
ECN113 EnDat 17pol.	359003		EnDat 01				M23 17-pin	

Solid shaft

Absolute encoder set with solid shaft

- For ZAtop, ZAsyn and ZAdisc motor types
- Signal shape speed: sine
- Speed: max. 3500 rpm
- Phase shift: 90°
- Connected adapter cable
- Protection class: IP40
- Shaft diameter: 9.25 mm / Cone 1:10

Type	Article no.	Interface absolute value	Resolution ppr	Signal tracks	Operating voltage VDC	Connection	Length adapter cable mm
ECN1313 EnDat-M16-245mm	70030034	EnDat01	2048	A, B, /A, /B	3.6...14	Plug M16 x 0.75 (SV120)	245
ECN1313 EnDat-M16-560mm	70030035						560
ECN1313 EnDat-M23-245mm	70030036					Plug M23 x 1	245
ECN1313 EnDat-DSUB15-1,2m	70030037					Plug D-SUB 15-pin	1200
ECN 1313 SSI-M16-245mm	70030038	SSI				Plug M16 x 0.75 (SV120)	245
ECN 1313 SSI-M16-560mm	70030039						560
ECN 1313 SSI-M23-245mm	70030040					Plug M23 x 1	245
ERN 1321-M16-245mm	70030041				5.0	Plug M16 x 0.75 (SV120)	245
ERN 1326-4096-M23-245mm	70030042	U, V, W	4096		5.0	Plug M23 x 1	245
ERN 1326-8192-M23-245mm	70030043		8192			Plug M23 x 1	245
ERN 1326-8192-AMP20-7m	70030044		8192			AMP20	7000
ERN 1387-M16-245mm	70030045	Z*	2048		5.0	Plug M16 x 0.75 (SV120)	245
ERN 1387-M23-245mm	70030046					Plug M23 x 1	245
ERN 1387-DSUB15-350mm	70030047					Plug D-SUB 15-pin	350
SMRS64-BISS-C-DSUB15-5m	70030744	BiSS-C	2048		4.0...30.0	Plug D-SUB 15-pin	5000
SMRS64-BISS-C-M16-220mm	70030745					Plug M16 x 0.75 (SV120)	220

* 1 sine period / revolution

ZAmon App

Fast - Easy - Intuitive

ZAmon is the perfect tool for operating ZAdyn frequency inverter and ZA-rec4C recuperation units with mobile devices such as smartphones or tablets. Clearly structured user interfaces with self-explanatory icons, informative texts for each parameter and the online support are perfect preconditions for fast and independent work.

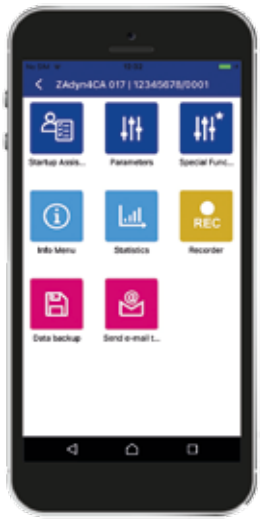

Commissioning wizard

- The commissioning wizard guides you in simple steps and with explanations through all necessary parameters to an optimum setting of the devices
- Time for commissioning < 10 minutes

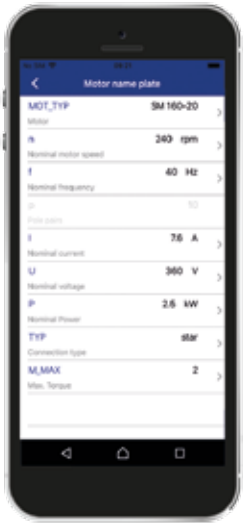

Parameterisation

- Clear summary of menus in function blocks (e.g. function block “Travel Curve”)
- Download, backup and upload of parameter files
- Reading of the technical data via the QR code on the motor name plate of the ZIEHL-ABEGG machines, frequency inverters, recuperation units and system components including the automatic transfer to the parameters file.

Offline parameterisation

- Creation and storage of parameter files e.g. in the office or workshop without connection to the device.
- As soon as the Bluetooth connection via ZAmon STICK is available, the transfer of the parameters can be activated.

Analysis

- Recording and evaluation of travel curves for analysis and diagnostics
- 4 analogue measuring channels
- 1 digital measuring channel
- Backup of recordings
- FFT-Analyse
- Mathematic analysis functions

Update

- Automatic information about the availability of a new firmware
- Firmware update via ZAmon

Customer service contact

- Direct e-mail contact to ZIEHL-ABEGG customer service
- Automatic collection of all important data and preparation of the e-mail with one click
- E-mail via the local e-mail client of the Mobile Device

The functionality of ZAmon is constantly being supplemented.

Download on the App Store

ZAmon for iOS

GET IT ON Google Play

ZAmon for android

Software ZAmon (PC version)

ZAmon

The perfect tool for diagnosing elevator systems and managing of parameters. ZAmon enables fast and simple access to all parameters and functions of the frequency inverters and recuperation units from ZIEHL-ABEGG.

The functions of ZAmon

- Time-optimised start-up of the frequency inverter type ZAdyn and the recuperation unit ZArec4C
- Analysis and optimisation of the travel curve
- Fast diagnosis of weak points such as rail joints, door lock interruptions or communication problems to the elevator control system
- Back-up and management of the parameters
- Creation of documents for documentation

ZAmon provides the suitable software module for every application:

Module “Display”

- Remote control of the frequency inverter or recuperation unit via Notebook

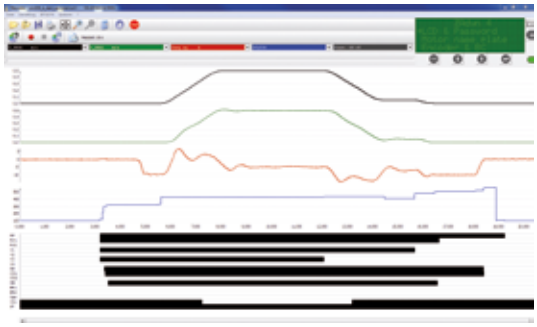

Module “Recorder”

Recording of travel curves for diagnostic purposes

- 4 analogue measuring channels
- 1 digital measuring channel
- Free assignment of the measuring channels with measuring functions
- Back-up of recordings
- Comparison of measurements
- FFT analysis
- Mathematic analysis functions

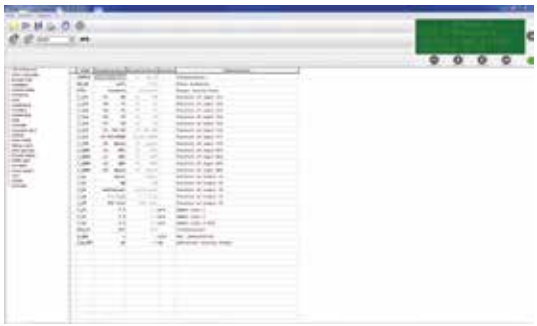

Module “Parameters”

Management of parameter

- Clear display of menus and parameters
- Editing of parameters in real time
- Saving parameters
- Printing of parameter lists
- Printing of error lists
- Loading of saved parameter sets into the frequency inverter or into the recuperation unit
- Comparison of parameters
- Loading installation and motor data from calculations created in the ZAlift calculation software

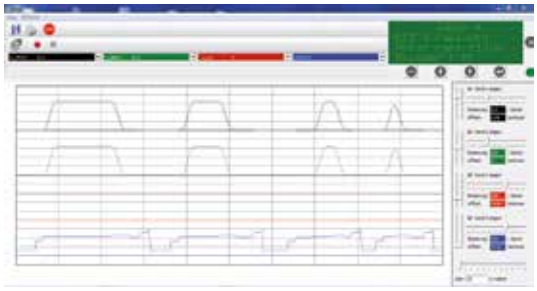

“Oszi” module

Realtime recording of travel curves for diagnosis purposes

- 4 analogue measurement channels
- Free assignment of measurement channels with measurement functions
- Save the Oszi-recordings

ZAmon is available as a free of charge download on the ZIEHL-ABEGG homepage.

General notes

The information and data contained in this catalogue were composed to the best of our best ability and do not absolve the user from its duty to check the suitability of the products with respect to its intended application.

The customer is obligated to inform the supplier about general information concerning the intended use, the type of installation, the operating conditions and any other conditions that need to be taken into consideration if the order is not based on catalogue information.

ZIEHL-ABEGG SE reserves the right to make design changes, which are used for continuous technical improvement.

This catalogue contains information for your guidance. No guarantee is provided with regard to the accuracy of all information and no legal claims may be derived from this. Reproduction of this information, or extracts thereof, is permitted only with written approval.

Copyright

ZIEHL-ABEGG SE reserves in its entirety the copyright of this catalogue. The catalogue is intended for proper use as intended and neither the catalogue, its content nor extracts may be passed on to third parties without our express written consent.

The Royal League

© ZIEHL-ABEGG SE - 00707920 - EN - MA - 09/2019 - 1.800 - Metzger Druck - This catalogue contains information for your guidance. No guarantee is provided with regard to the accuracy of all information and no legal claims may be derived from this. Reproduction of this information, or extracts thereof, is permitted only with written approval.

ZIEHL-ABEGG

ZIEHL-ABEGG SE Heinz-Ziehl-Straße D-74653 Künzelsau +49 (0) 79 40 / 16 - 0 info@ziehl-abegg.com ziehl-abegg.com